TREMIS®

ВЪЛНИЕЗАЩИТА ЕООД®

+359 894 311 788

e-mail : mid_1222@yahoo.com

www.zashtitabg.com

LIGHTNING CONDUCTORS AND GROUNDING SYSTEM'S PARTS

CATALOGUE

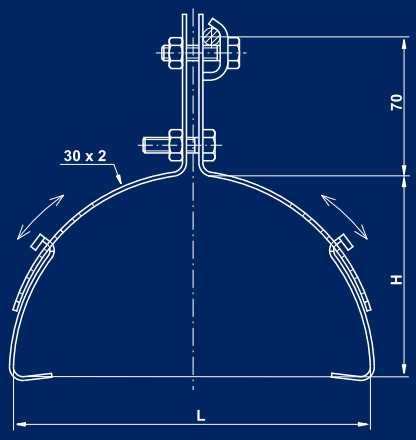

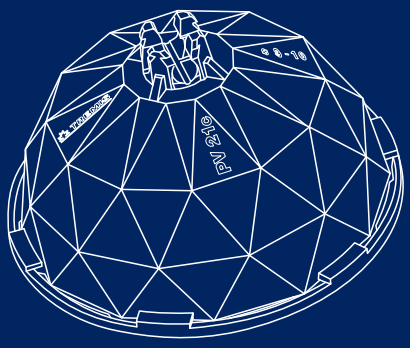

CLAMPS	universal (SU, SUA, SUB)	4
	parallel (SS, SSp)	5
	test (SZa, SZb, SZc)	5
	attaching (SP, SPb, SPc, SPd, SPe)	6
	cross (SK, SKv, SK+1)	7
	cross (SK E, SK+1 E)	7
	cross diagonal (SKd)	7
	for receiving rod (SJ 1, SJ 1b, SJ 1c, SJ 1e, SJ 1f)	8
	for rod diagonal (SJ 1d)	8
	for grounding rod (SJ 2, SJ 2b)	9
	gutter (SOa, SOb, SOc)	9
	gutter downpipe (ST)	10
	pipeline (ST 1 – 9)	10
	grounding tape – tape (SR 2a, SR 2a+1)	11
	grounding tape – tape (SR 2b, SR 2v, SR 2b+1)	11
	grounding tape – tape diagonal (SR 2dm, SR 2dv)	11
	grounding tape – wire (SR 3a, SR 3b, SR 3v, SR 3b+1)	12
	grounding tape – wire (SR 3b E, SR 3b+1 E)	12
	grounding tape – wire (SR 3c, SRK, SKT)	13
	grounding tape – wire diagonal (SR 3d)	13
	grounding tape – wire (SRT, SKTz, SKTzp, SKTm)	14
	grounding point (ZB, axis M10)	15
	grounding point (ZB 12/10, waterproof seal)	15
	to grounding point (ZBSRm, ZBSRv)	15
CONDUCTOR SUPPORTS	for masonry (PV 1a, PV 1b, PV 1h)	16
	for wall (PV 1s)	16
	for masonry (PV 1p)	17
	under roofing tile (PV 11, PV 11b, PV 11c)	17
	under roofing tile (PV 11d)	18
	under sloped roofing tile (PV 12, PV 13)	18
	under ridge tile (PV 14)	18
	at the top of ridge tile (PV 15a, PV 15b, PV 15c)	19
	at the top of ridge tile (PV 15d, PV 15e, PV 15f)	19
	conductor support (PV 17)	20
	to wooden constructions (PV 18)	20
	for flat roofs (PV 21c, attachment PV 21c, lid PV 21c)	20
	for flat roofs (PV 21d, PV 21d - plastic)	21
	under roofing tile (PV 22a, PV 22ap, PV 22b)	21
	for sheet metal roofs (PV 23)	22
	for masonry (PV 42)	22
	for constructions (PV 32, PV 44)	22
HOLDERS, RODS, PLATES	of protective angle steel (DOUa, DUDa, DUDb, DUS, DUZ)	23
	of receiving rod and protective pipe (DJT, DJD, DJDb, DJDc, DJSb)	24
	protective roof (OSH, OSD)	25
	protective angle steel (OU)	25
	protective pipe (OT)	25
	insertion rod (TZ)	25
	receiving rod for ridge tile (half round) (JR PV15)	26
	receiving rod (JR, JK, JV)	26
	receiving rod (JR 18/10, JR 18/10t)	27
	receiving rod -pipe (JT)	27
	concrete stand (PB 9, PB 19)	28
	rubber rest (rest PB 9, rest PB 19)	28
	support stand for receiving rod (SJ)	28
	collar for receiving rod (OJ)	28
	connecting rod (TS)	28
	wire clamp	28
	stranded wire stainless	28
	grounding rod (ZT, ZTs, ZTt, ZTk)	29
	grounding plate (ZD 01, ZD 02)	29
CONDUCTORS	tape holder (DP, DPb)	30
	round conductor	30
	stranded conductor	30
	tape conductor	30
ISOLATED AIR-TERMINATION SYSTÉM	„T“ holder for Isolated Air-Termination system (DOHS, DOHSK)	31
	„L“ holder for Isolated Air-Termination system (DOHL, DOHLK)	31
	holder corner for Isolated Air-Termination system (DOHR, DOHRK)	32
	holder angle for Isolated Air-Termination system (DOHU, DOHUK)	32
	holder for receiving rode for Isolated Air-Termination system (DOHJK)	33
	holder for pipe for Isolated Air-Termination system (DOHT, DOHTK, DOHT 1-9)	33
	hinge for Isolated Air-Termination system (KOH)	34
	isolating rod for conductor (ITV)	34
	isolating rod for receiving (ITJ)	34
	isolating rod (IT)	34
OTHER	marking plate	35
	washer	35
	washer PE	35
	covering PE	35
	lead sheet Pb	36
	terminal board for main connection	36
	cable clamp “SONAP“	36
	steel rope clamp	36
	tensiining screw	36
	wire straightener	37
	tools	37
	View of standarts, technical informations	38

Dear customer,

*Let me introduce a company **TREMIS s.r.o.**, established in 1995 and ever since developing, producing and selling parts for external lightning protection.*
Variety of products made of hot dip galvanized steel, copper, stainless steel are being offered.
Our goal is to produce high quality products with easy and fast assembling. Our products are environmentally friendly and safe for intended use.

Certification and declaration

Our products are regularly tested in prescribed time periods in Electrical testing facility.
*The company launched and ever since uses quality management in accordance with **ČSN EN ISO 9001:2009**.*
***Certificate TÜV SÜD Czech s.r.o.** for following activities were issued: development, production and sale of lightning conductors and grounding.*
Our company has signed contract with authorized packaging company EKO-KOM a.s. and has joined the EKO-KOM system to ensure obligations of take-back and recovery of packaging.
Our registration number is EK-P0060007.

Lightning conductors and grounding system´s parts – hot dip galvanized steel

- *The list of products is continuously restocked with new supports and clamps.*
- *Used material: steel of grade 11, grey and malleable cast iron, in catalogue marked **H.D.G.** and plastic with UV stabilization.*
- ***The hot dip galvanization** assures a lifelong anticorrosive protection.*
- ***Connecting material M8 and M10 is hot dip galvanized**, if isn´t in catalogue otherwise.*
- *The assembly of hot dip galvanized products with conductor according to specification and recommendation mentioned in page 38.*

Lightning conductors and grounding system´s parts - cooper

- *Copper products are of the same design and use as hot dip galvanized ones.*
- *Used material: copper 99,9 E Cu – power conductive (E-Cu 57), in catalogue marked **Copper**.*
- ***Connecting material M8 and M10 is copper.***
- *Welded products are made of copper (wood screws ø 6/50, ø 8/160 and ø 8/200 are of stainless steel).*
- *The assembly of copper products with conductor according to specification and recommendation mentioned in page 38.*
- *In case of connecting the cooper and galvanized material it is necessary to use lead inserts.*

Lightning conductors and grounding system´s parts – stainless steel

- *Stainless steel products are of the same design and use as hot dip galvanized and copper ones.*
- *Used material: stainless steel 17240 (1.4301,CrNi 18 10), in a catalogue marked **Inox**.*
- *Used material: stainless steel 17244 (1.4404,CrNiMo 17 12 2) - using into earth, in a catalogue marked **Inox V4A**.*
- *Connecting material M8 and M10 is stainless steel A2 or A4 (using into earth).*
- *Welded products are made of stainless steel.*
- *Products in catalogue marked AlMgSi made of material EN AW 6101B.*
- *The assembly of stainless steel products with conductor according to specification and recommendation mentioned in page 38.*

UNIVERSAL CLAMP

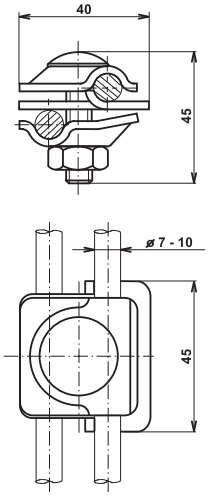

Made of	Marking	Weight (kg)	Package (pcs)	Code
H.D.G.	**SU**	0,131	100	V001
Copper	**SU Cu**	0,141	1	V600
Inox	**SU N**	0,112	1	VN2000

Methods application:

Parallel connection

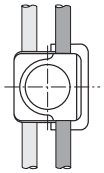

Cross connection

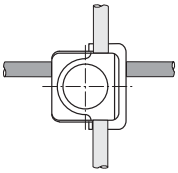

„T“ connection

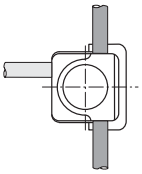

Coaxial connection

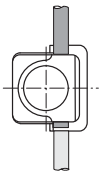

Flat material connection

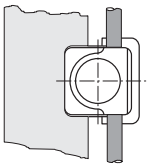

UNIVERSAL CLAMP WITH ONE SPLICE

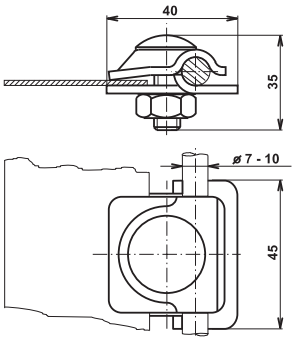

Made of	Marking	Weight (kg)	Package (pcs)	Code
H.D.G.	**SUA**	0,099	100	V005
Copper	**SUA Cu**	0,105	1	V605
Inox	**SUA N**	0,085	1	VN2005

Application: Connection of round conductor with flat material.

UNIVERSAL CLAMP WITHOUT INTERMEDIATE PLATE

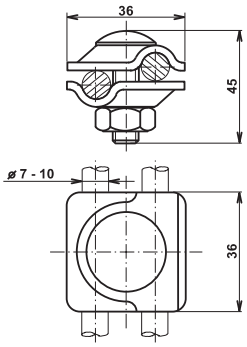

Made of	Marking	Weight (kg)	Package (pcs)	Code
H.D.G.	**SUB**	0,100	100	V010
Copper	**SUB Cu**	0,106	1	V610
Inox	**SUB N**	0,085	1	VN2010
Inox V4A	**SUB N V4A**	0,087	1	VN2011

Application: Same as with universal clamp SU, except of connection with flat material.

PARALLEL CLAMP

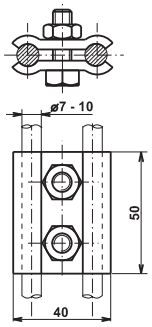

Made of	Marking	Weight (kg)	Package (pcs)	Code
H.D.G.	**SS**	0,107	150	V015
Copper	**SS Cu**	0,120	1	V615
Inox	**SS N**	0,086	1	VN2015

Application: Connection of round conductors and connection with flat material.

PARALLEL CLAMP WITH SPLICE

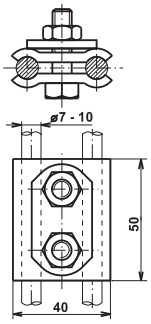

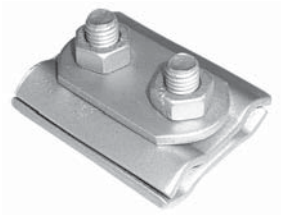

Made of	Marking	Weight (kg)	Package (pcs)	Code
H.D.G.	**SSp**	0,138	100	V020
Copper	**SSp Cu**	0,155	1	V620

Application: Connection of round conductors and connection with flat material.

TEST CLAMP

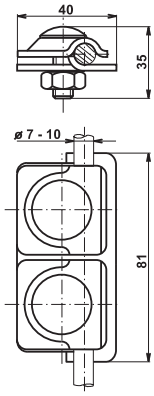

Made of	Marking	Weight (kg)	Package (pcs)	Code
H.D.G.	**SZa**	0,193	100	V025
Copper	**SZa Cu**	0,206	1	V625
Inox	**SZa N**	0,162	1	VN2025

Application: Connection of above ground lightning conductor with grounding.

Material: Hot dip galvanized steel, brass nuts.

TEST CLAMP

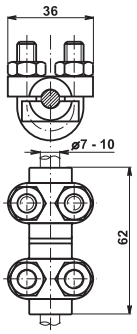

Made of	Marking	Weight (kg)	Package (pcs)	Code
H.D.G.	**SZb**	0,180	100	V030

Application: Connection of above ground lightning conductor with grounding.

Material: Hot dip galvanized malleable cast iron, brass nuts, the sttirups are made of hot dip galvanized steel.

TEST CLAMP

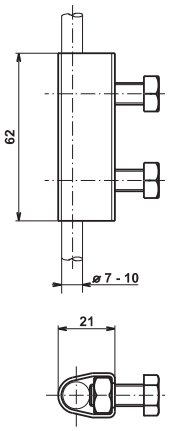

Made of	Marking	Weight (kg)	Package (pcs)	Code
H.D.G.	**SZc**	0,120	100	V035
Copper	**SZc Cu**	0,140	1	V627
Inox	**SZc N**	0,118	1	VN2027

Application: Connection of above ground lightning conductor with grounding.

Material: Hot dip galvanized steel, brass nuts.

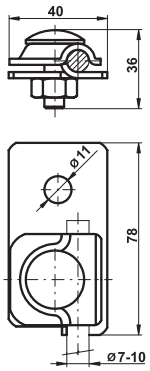

ATTACHING CLAMP

Made of	Marking	Weight (kg)	Package (pcs)	Code
H.D.G.	**SP**	0,125	100	V040
Copper	**SP Cu**	0,134	1	V630
Inox	**SP N**	0,108	1	VN2030

Application: Attaching the round conductor to metal parts of the premises.

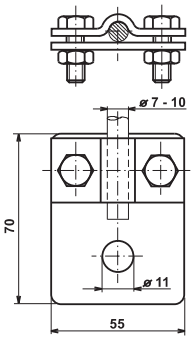

ATTACHING CLAMP

Made of	Marking	Weight (kg)	Package (pcs)	Code
H.D.G.	**SPb**	0,146	50	V045
Copper	**SPb Cu**	0,160	1	V635

Application: Attaching the round conductor to metal parts of the premises.

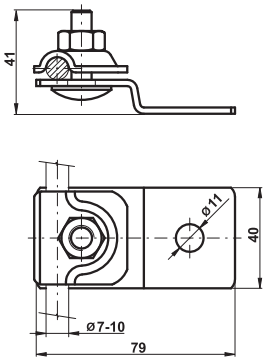

ATTACHING CLAMP

Made of	Marking	Weight (kg)	Package (pcs)	Code
H.D.G.	**SPc**	0,129	100	V046
Inox	**SPc N**	0,112	1	VN2032

Application: Attaching the round conductor to metal parts of the premises.

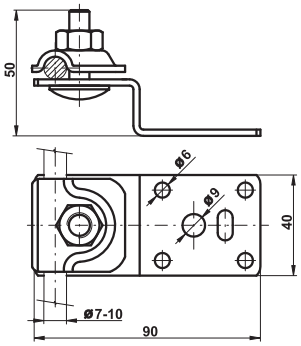

ATTACHING CLAMP

Made of	Marking	Weight (kg)	Package (pcs)	Code
H.D.G.	**SPd**	0,144	100	V047
Inox	**SPd N**	0,124	1	VN2033

Application: Attaching the round conductor to metal parts of the premises with screws or rivets.

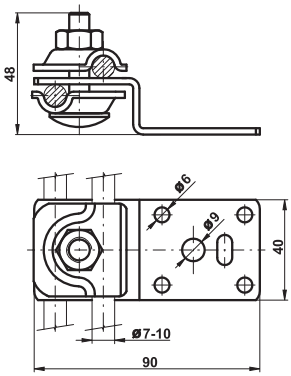

ATTACHING CLAMP

Made of	Marking	Weight (kg)	Package (pcs)	Code
H.D.G.	**SPe**	0,180	100	V048
Inox	**SPe N**	0,152	1	VN2034

Application: Attaching the round conductors to metal parts of the premises with screws or rivets.

CROSS CLAMP

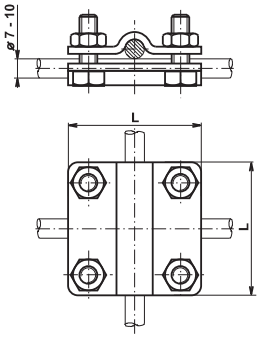

Made of	Marking	L (mm)	Weight (kg)	Package (pcs)	Code
H.D.G.	**SK**	55	0,216	50	V050
Copper	**SK Cu**	55	0,236	1	V640
Inox	**SK N**	55	0,186	1	VN2040
Inox V4A	**SK N V4A**	55	0,186	1	VN2041
H.D.G.	**SKv**	65	0,344	50	V048
Inox V4A	**SKv N V4A**	65	0,268	1	VN2047

Application: Cross connection of round conductors.

CROSS CLAMP + INTERMEDIATE PLATE

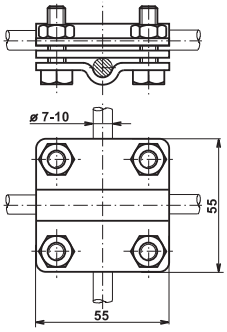

Made of	Marking	Weight (kg)	Package (pcs)	Code
H.D.G.	**SK+1**	0,284	50	V051

Application: Cross connection of round conductors.

CROSS CLAMP M6

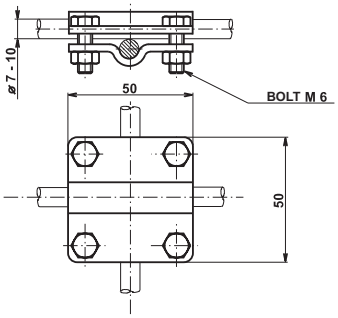

Made of	Marking	Weight (kg)	Package (pcs)	Code
H.D.G.	**SK E**	0,152	50	V052
Inox	**SK E N**	0,120	50	VN2042
Inox V4A	**SK E N V4A**	0,120	50	VN2043

Application: Cross connection of round conductors.

Material: Hot dip galvanized steel, galvanized bolts.

CROSS CLAMP + INTERMEDIATE PLATE M6

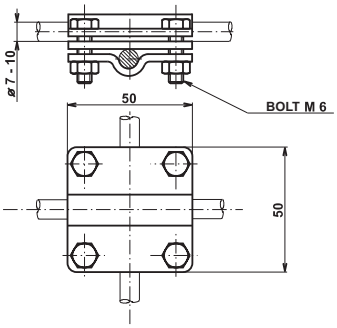

Made of	Marking	Weight (kg)	Package (pcs)	Code
H.D.G.	**SK+1 E**	0,211	50	V053

Application: Cross connection of round conductors.

Material: Hot dip galvanized steel, galvanized bolts.

CROSS DIAGONAL CLAMP

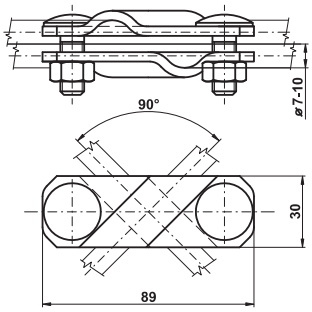

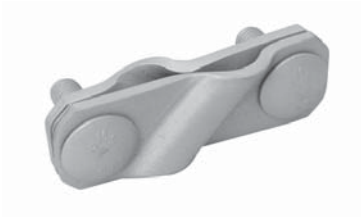

Made of	Marking	Weight (kg)	Package (pcs)	Code
H.D.G.	**SKd**	0,235	50	V054
Inox	**SKd N**	0,188	1	VN2045
Inox V4A	**SKd N V4A**	0,188	1	VN2046

Application: Cross connection of round conductors.

CLAMP FOR RECEIVING ROD

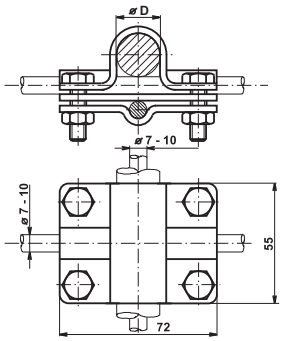

Made of	Marking	Ø D	Weight (kg)	Package (pcs)	Code
H.D.G.	**SJ 1**	18	0,387	50	V055
Copper	**SJ 1 Cu**	18	0,421	1	V645
H.D.G.	**SJ 1e**	16	0,354	50	V071
Inox	**SJ 1e N**	16	0,294	1	VN2055

Application: Connecting the round conductor with receiving rod.

CLAMP FOR RECEIVING ROD

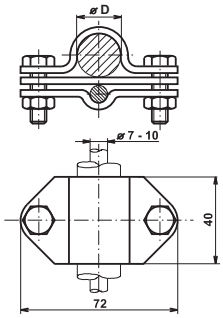

Made of	Marking	Ø D	Weight (kg)	Package (pcs)	Code
H.D.G.	**SJ 1b**	18	0,228	50	V060
Copper	**SJ 1b Cu**	18	0,244	1	V650
Inox	**SJ 1b N**	18	0,168	1	VN2050
H.D.G.	**SJ 1f**	16	0,209	50	V072
Inox	**SJ 1f N**	16	0,145	1	VN2057

Application: Connecting the round conductor with receiving rod.

CLAMP FOR RECEIVING ROD JT

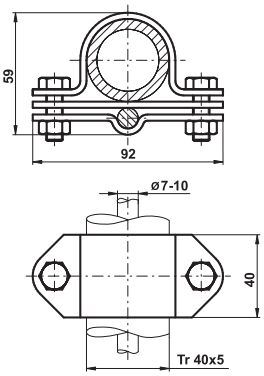

Made of	Marking	Weight (kg)	Package (pcs)	Code
H.D.G.	**SJ 1c**	0,304	50	V061
Inox	**SJ 1c N**	0,207	1	VN2051

Application: Connecting the round conductor with receiving rod JT (ø 40 mm).

CLAMP FOR ROD DIAGONAL

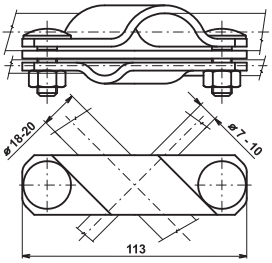

Made of	Marking	Weight (kg)	Package (pcs)	Code
H.D.G.	**SJ 1d**	0,382	50	V063
Inox	**SJ 1d N**	0,302	1	VN2054
Inox V4A	**SJ 1d N V4A**	0,302	1	VN2053

Application: Connecting the grounding tape and round conductor to insertion rods (TZ).

CLAMP FOR GROUNDING ROD

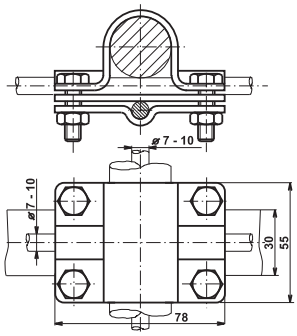

Made of	Marking	Weight (kg)	Package (pcs)	Code
H.D.G.	**SJ 2**	0,417	50	V065
Copper	**SJ 2 Cu**	0,459	1	V655

Application: Connecting the grounding tape and round conductor to grounding rod.

CLAMP FOR GROUNDING ROD

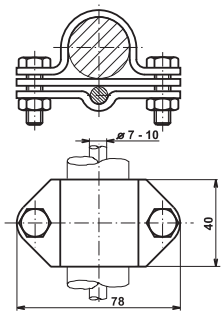

Made of	Marking	Weight (kg)	Package (pcs)	Code
H.D.G.	**SJ 2b**	0,255	50	V070
Copper	**SJ 2b Cu**	0,285	1	V660

Application: Connecting the grounding tape and round conductor to grounding rod.

GUTTER CLAMP

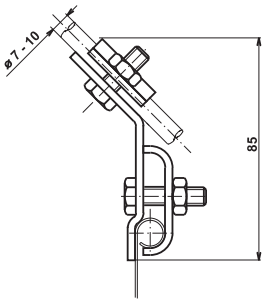

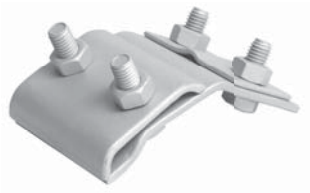

Made of	Marking	Weight (kg)	Package (pcs)	Code
H.D.G.	**SOa**	0,280	50	V075
Copper	**SOa Cu**	0,308	1	V665

Application: Connects the round conductor to the gutter.

GUTTER CLAMP

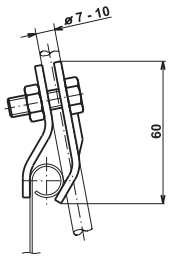

Made of	Marking	Weight (kg)	Package (pcs)	Code
H.D.G.	**SOb**	0,150	100	V080
Copper	**SOb Cu**	0,168	1	V670

Application: Connects the round conductor to the gutter.

GUTTER CLAMP

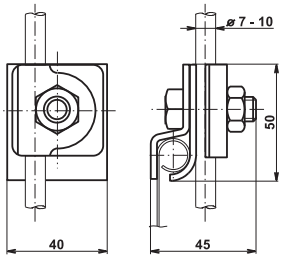

Made of	Marking	Weight (kg)	Package (pcs)	Code
H.D.G.	**SOc**	0,147	100	V085
Copper	**SOc Cu**	0,160	1	V675
Inox	**SOc N**	0,128	1	VN2075

Application: Connects the round conductor to the gutter.

DOWNPIPE CLAMP

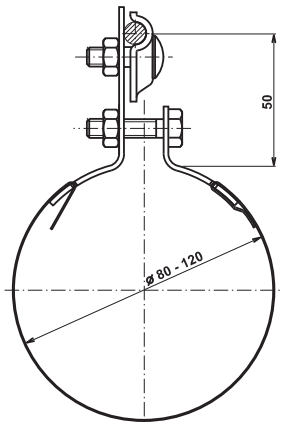

Made of	Marking	Weight (kg)	Package (pcs)	Code
H.D.G.	ST	0,160	100	V095
	ST w/o tape	0,133	100	V090
	Tape Inox	0,060	1m	V105
Copper	ST Cu	0,168	1	V685
	ST w/o tape Cu	0,145	1	V680
	Tape Cu	0,065	1m	V690
Inox	ST N	0,129	1	VN2080
	ST w/o tape N	0,102	1	VN2079

Application: Connects the eavestrough to the round conductor. Use of fl exible stainless steel tape enables univer sal use of this kind of clamp for several diameters of downpipe or other pipes.

PIPELINE CLAMP

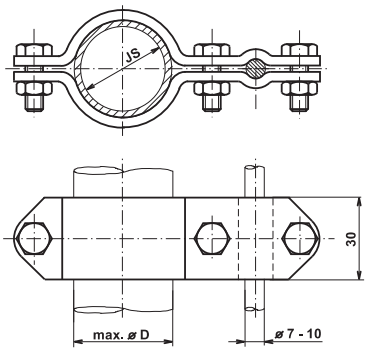

Made of	Marking	øD (mm)	Js (")	Weight (kg)	Package (pcs)	Code
H.D.G.	ST 1	18 - 22	1/2	0,208	50	V096
	ST 2	23 - 27	3/4	0,255	50	V097
	ST 3	28 - 34	1	0,275	50	V098
	ST 4	35 - 43	1 1/4	0,295	50	V099
	ST 5	44 - 49	1 1/2	0,315	50	V100
	ST 6	50 - 61	2	0,345	50	V101
	ST 7	67 - 77	2 1/2	0,373	50	V102
	ST 8	81 - 90	3	0,405	50	V103
	ST 9	106 - 115	4	0,497	50	V104
Copper	ST 1 Cu	18 - 22	1/2	0,237	1	V691
	ST 2 Cu	23 - 27	3/4	0,289	1	V692
	ST 3 Cu	28 - 34	1	0,313	1	V693
	ST 4 Cu	35 - 43	1 1/4	0,336	1	V694
Inox	ST 1 N	18 - 22	1/2	0,167	1	VN2081
	ST 2 N	23 - 27	3/4	0,203	1	VN2082
	ST 3 N	28 - 34	1	0,218	1	VN2083
	ST 4 N	35 - 43	1 1/4	0,233	1	VN2084
	ST 5 N	44 - 49	1 1/2	0,248	1	VN2085
	ST 6 N	50 - 61	2	0,271	1	VN2086
	ST 7 N	67 - 77	2 1/2	0,292	1	VN2087
	ST 8 N	81 - 90	3	0,315	1	VN2088
	ST 9 N	106 - 115	4	0,384	1	VN2089

Application: Connects pipelines and eavestroughs with round conductor.

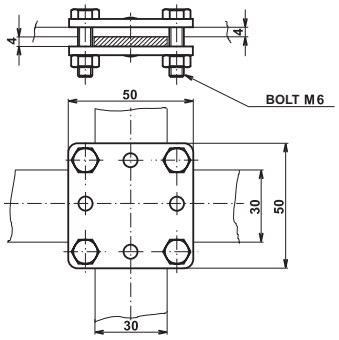

GROUNDING TAPE – TAPE CLAMP M6

Made of	Marking	Weight (kg)	Package (pcs)	Code
H.D.G.	**SR 2a**	0,146	100	V108

Application: Used for cross and parallel connection of grounding tape conductor.

Material: Hot dip galvanized steel, galvanized bolts.

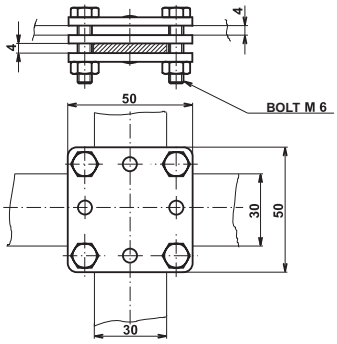

GROUNDING TAPE - TAPE CLAMP + INTERMEDIATE PLATE M 6

Made of	Marking	Weight (kg)	Package (pcs)	Code
H.D.G.	**SR 2a+1**	0,202	50	V109

Application: Used for cross and parallel connection of grounding tape conductor.

Material: Hot dip galvanized steel, galvanized bolts.

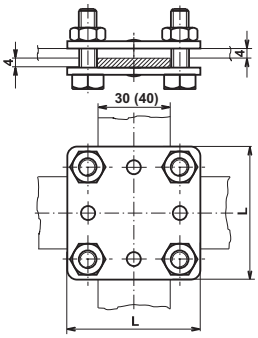

GROUNDING TAPE – TAPE CLAMP

Made of	Marking	L (mm)	Weight (kg)	Package (pcs)	Code
H.D.G.	**SR 2b**	55	0,208	50	V110
Copper	**SR 2b Cu**	55	0,228	1	V710
Inox	**SR 2b N**	55	0,196	1	VN2090
Inox V4A	**SR 2b N V4A**	55	0,196	1	VN2091
H.D.G.	**SR 2v**	65	0,328	50	V106
Inox V4A	**SR 2v N V4A**	65	0,258	1	VN2092

Application: Used for cross and parallel connection of grounding tape conductor. Version SR 2b is for tape conductor 30 x 4 (3,5) mm, SR 2v is for tape conductor 40 x 4 (5) mm.

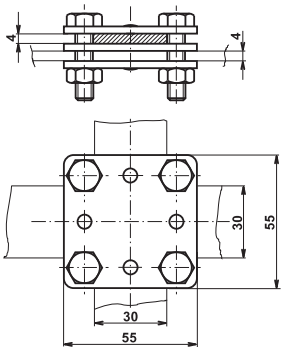

GROUNDING TAPE - TAPE CLAMP + INTERMEDIATE PLATE

Made of	Marking	Weight (kg)	Package (pcs)	Code
H.D.G.	**SR 2b+1**	0,275	50	V111

Application: Used for cross and parallel connection of grounding tape conductor.

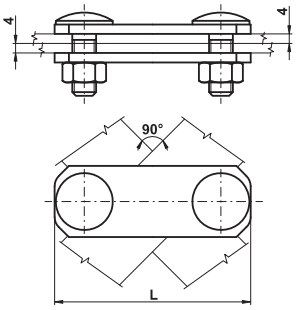

GROUNDING TAPE – TAPE DIAGONAL CLAMP

Made of	Marking	L (mm)	Weight (kg)	Package (pcs)	Code
H.D.G.	**SR 2dv**	96	0,247	50	V112
Inox	**SR 2dv N**	96	0,193	1	VN2100
Inox V4A	**SR 2dv N V4A**	96	0,193	1	VN2101
H.D.G.	**SR 2dm**	82,5	0,217	50	V113

Application: Used for cross and parallel connection of grounding tape conductor. Version SR 2dv is for tape conductor 40 x 4 (5) mm, SR 2dm is for tape conductor 30 x 4 (3,5) mm.

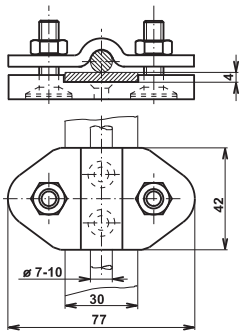

GROUNDING TAPE - WIRE CLAMP

Made of	Marking	Weight (kg)	Package (pcs)	Code
H.D.G.	**SR 3a**	0,249	50	V115

Application: For parallel connection of grounding tape and round conductor.

Material: Hot dip galvanized malleable cast iron, splice is made of hot dip galvanized steel.

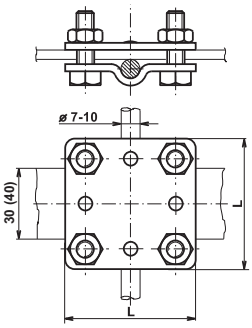

GROUNDING TAPE - WIRE CLAMP

Made of	Marking	L (mm)	Weight (kg)	Package (pcs)	Code
H.D.G.	**SR 3b**	55	0,214	50	V120
Copper	**SR 3b Cu**	55	0,232	1	V715
Inox	**SR 3b N**	55	0,201	1	VN2093
Inox V4A	**SR 3b N V4A**	55	0,201	1	VN2095
H.D.G.	**SR 3v**	65	0,336	50	V119
Inox V4A	**SR 3v N V4A**	65	0,263	1	VN2112

Application: Used for cross and parallel connection of grounding tape conductor and round conductor. Version SR 3b is for tape conductor 30 x 4 (3,5) mm, SR 3v is for tape conductor 40 x 4 (5) mm.

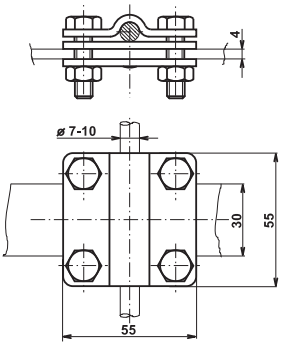

GROUNDING TAPE - WIRE CLAMP + INTERMEDIATE PLATE

Made of	Marking	Weight (kg)	Package (pcs)	Code
H.D.G.	**SR 3b+1**	0,281	50	V121
Inox	**SR 3b+1 N**	0,243	1	VN2094

Application: For parallel and cross connection of grounding tape and round conductor.

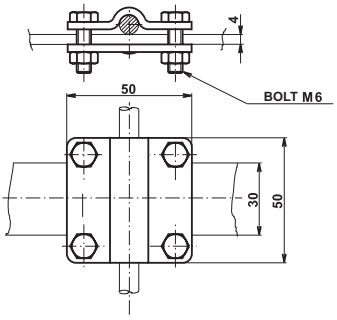

GROUNDING TAPE - WIRE CLAMP M6

Made of	Marking	Weight (kg)	Package (pcs)	Code
H.D.G.	**SR 3b E**	0,149	50	V122

Application: For parallel and cross connection of grounding tape and round conductor.

Material: Hot dip galvanized steel, galvanized bolts.

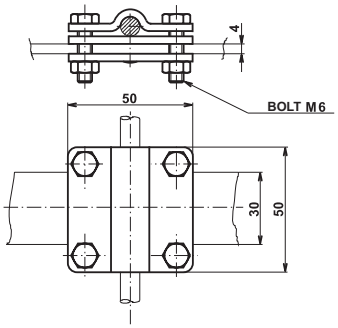

GROUNDING TAPE - WIRE CLAMP + INTERMEDIATE PLATE M6

Made of	Marking	Weight (kg)	Package (pcs)	Code
H.D.G.	**SR 3b+1 E**	0,209	50	V123

Application: For parallel and cross connection of grounding tape and round conductor.

Material: Hot dip galvanized steel, galvanized bolts.

GROUNDING TAPE - WIRE CLAMP

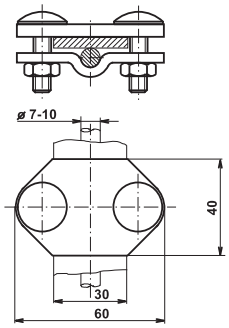

Made of	Marking	Weight (kg)	Package (pcs)	Code
H.D.G.	**SR 3c**	0,163	100	V125
Copper	**SR 3c Cu**	0,172	1	V720

Application: For parallel connection of grounding tape and round conductor.

GROUNDING TAPE-WIRE DIAGONAL CLAMP

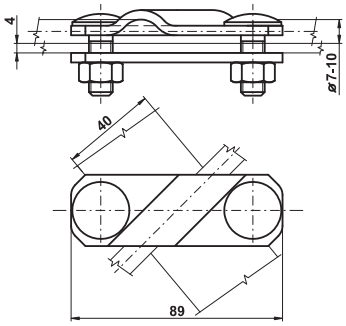

Made of	Marking	Weight (kg)	Package (pcs)	Code
H.D.G.	**SR 3d**	0,234	50	V126
Inox	**SR 3d N**	0,186	1	VN2110
Inox V4A	**SR 3d N V4A**	0,186	1	VN2111

Application: Used for cross and parallel connection of grounding tape and round conductor.

GROUNDING TAPE - TAPE - WIRE CLAMP (WEDGE)

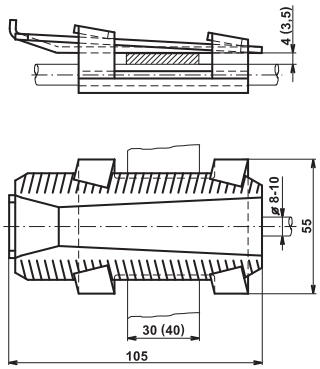

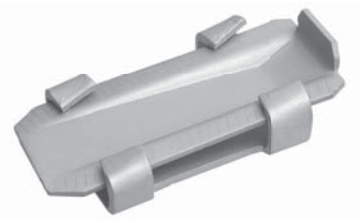

Made of	Marking	Weight (kg)	Package (pcs)	Code
H.D.G.	**SRK**	0,208	50	V127

Application: For parallel and cross connection of grounding tape or grounding tape and round conductor in concrete.

GROUNDING TAPE-TAPE-WIRE CLAMP (WITH SCREW)

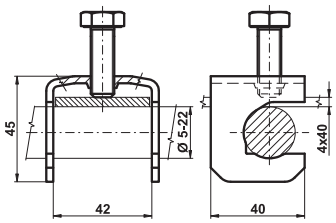

Made of	Marking	Weight (kg)	Package (pcs)	Code
H.D.G.	**SKT**	0,111	50	V128

Application: For cross and parallel connections of grounding tape or grounding tape and round conductor with concrete reinforcement.

GROUNDING TAPE - TAPE - WIRE CLAMP (WITH SCREW)

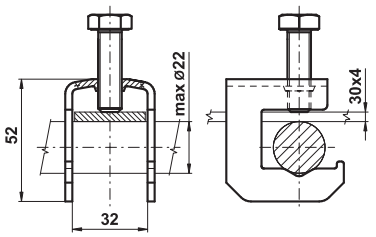

Made of	Marking	Weight (kg)	Package (pcs)	Code
H.D.G.	**SKTz**	0,127	50	V124
Inox V4A	**SKTz N V4A**	0,110	1	VN2140

Application: For cross and parallel connections of grounding tape or grounding tape and round conductor with concrete reinforcement.

GROUNDING TAPE - TAPE - WIRE CLAMP (WITH SCREW +SPLICE)

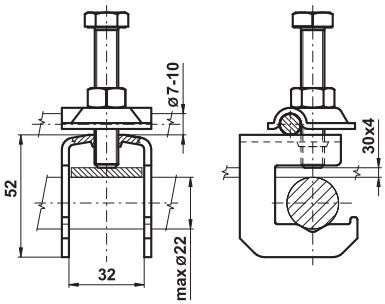

Made of	Marking	Weight (kg)	Package (pcs)	Code
H.D.G.	**SKTzp**	0,182	50	V116
Inox V4A	**SKTzp N V4A**	0,153	1	VN2145

Application: For cross and parallel connections of grounding tape or grounding tape and round conductor with concrete reinforcement and for connecting the grounding point to concrete reinforcement.

GROUNDING WIRE - WIRE - TAPE CLAMP (WITH SCREW)

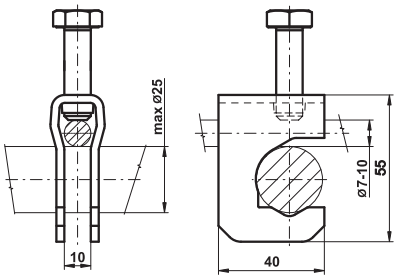

Made of	Marking	Weight (kg)	Package (pcs)	Code
H.D.G.	**SKTm**	0,103	50	V088
Inox V4A	**SKTm N V4A**	0,091	1	VN2142

Application: For cross connections of round conductors, grounding tape and round conductor or paralel connections grounding tape with concrete reinforcement.

GROUNDING TAPE-TAPE-WIRE CLAMP (WITH SCREW)

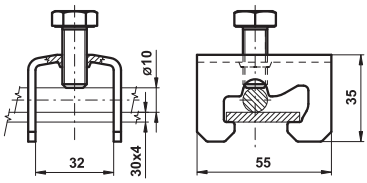

Made of	Marking	Weight (kg)	Package (pcs)	Code
H.D.G.	**SRT**	0,119	50	V114
Inox V4A	**SRT N V4A**	0,101	1	VN2150

Application: For cross and parallel connections of grounding tape or for parallel connecting of grounding tape with the concrete reinforcement and terminal lugs ø 10 mm in concrete.

GROUNDING POINT

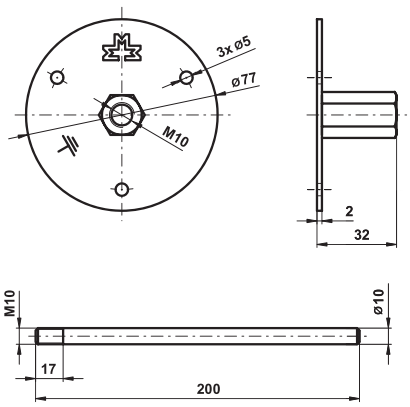

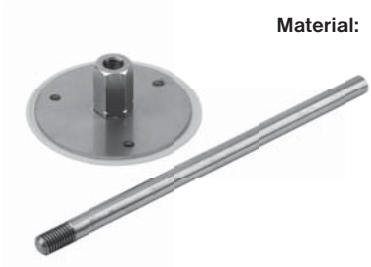

Made of	Marking	Weight (kg)	Package (pcs)	Code
Inox V4A	**ZB N V4A**	0,118	1	VN2115
Inox V4A	**Axis M10 N V4A**	0,123	1	VN2120
H.D.G.	**Axis M10**	0,123	1	V580

Application: For connections down – conductor system to foundation earthing electrode.

Material: Stainless steel V4A, cap plastic yellow color, axis M10 stainless steel V4A or hot dip galvanized steel.

GROUNDING POINT 12/10

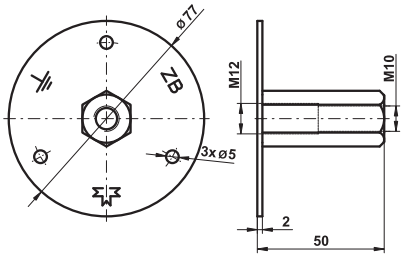

Made of	Marking	Weight (kg)	Package (pcs)	Code
Inox V4A	**ZB 12/10 N V4A**	0,164	1	VN2116

Application: For connections down – conductor system to foundation earthing electrode. Connection can be made with screw M10 or M12. Connecting axis is same as in variant ZB N V4A.

Material: Stainless steel V4A, cap plastic yellow color.

WATERPROOF SEAL

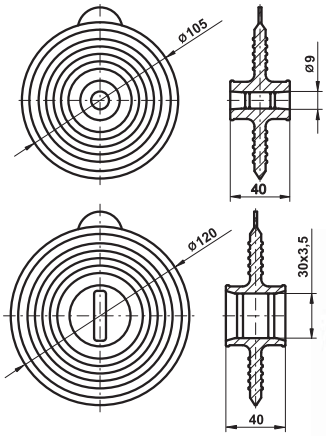

Marking	Weight (kg)	Package (pcs)	Code
Waterproof seal 10	0,124	1	Z440
Waterproof seal 30/4	0,173	1	Z445

Application: Seals prevent penetration of water in to the wall along grounding point axis or along outputs the earting systém made of round conductor ø 10 mm or tape conductor 30 x 4 (3,5) mm.

Material: Rubber, fastening tapes Inox.

GROUNDING POINT TAPE – WIRE CLAMP

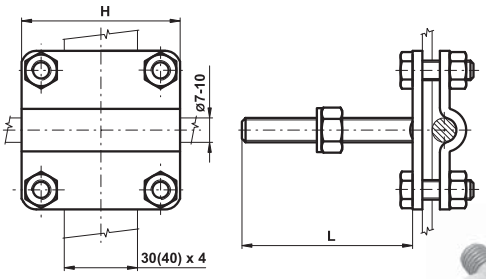

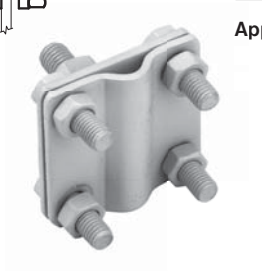

Made of	Marking	H (mm)	L (mm)	Weight (kg)	Package (pcs)	Code
H.D.G.	**ZBSRm**	55	40	0,244	50	V117
Inox V4A	**ZBSRm N V4A**	55	40	0,217	1	VN2130
H.D.G.	**ZBSRv**	65	70	0,376	50	V118
Inox V4A	**ZBSRv N V4A**	65	70	0,310	1	VN2135

Application: For connections grounding tape or round conductor with grounding point. Version ZBSRm is for tape conductor 30 x 4 (3,5) mm, ZBSRv is for tape conductor 40 x 4 (5) mm.

CONDUCTOR SUPPORT

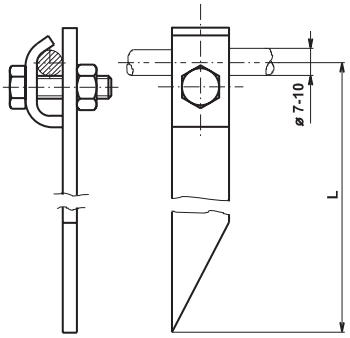

Made of	Marking	L (mm)	Weight (kg)	Package (pcs)	Code
H.D.G.	**PV 1a-15**	150	0,154	50	V130
	PV 1a-20	200	0,194	50	V135
	PV 1a-25	250	0,236	50	V140
	PV 1a-30	300	0,278	50	V145
Copper	**PV 1a-15 Cu**	150	0,166	1	V725
	PV 1a-20 Cu	200	0,210	1	V730
	PV 1a-25 Cu	250	0,254	1	V735
	PV 1a-30 Cu	300	0,297	1	V740

Application: Fastening the lightning conductor on masonry or wood.

CONDUCTOR SUPPORT FOR MASONRY

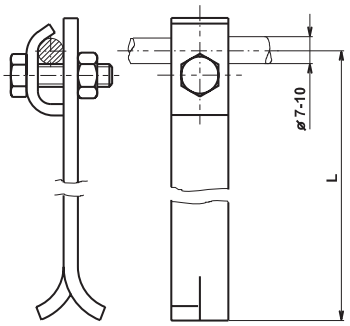

Made of	Marking	L (mm)	Weight (kg)	Package (pcs)	Code
H.D.G.	**PV 1b-15**	150	0,146	50	V150
	PV 1b-20	200	0,178	50	V155
	PV 1b-25	250	0,218	50	V160
Copper	**PV 1b-15 Cu**	150	0,154	1	V745
	PV 1b-20 Cu	200	0,189	1	V750
	PV 1b-25 Cu	250	0,227	1	V755

Application: Fastening the lightning conductor on masonry.

CONDUCTOR SUPPORT DOWEL MOUNTED

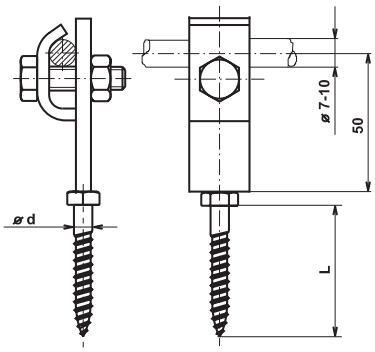

Made of	Marking	ød/L (mm)	Weight (kg)	Package (pcs)	Code
H.D.G.	**PV 1h**	6/50	0,094	100	V165
Copper	**PV 1h Cu**	6/50	0,109	1	V760
Inox	**PV 1h N**	6/50	0,088	1	VN2160

Application: Fastening the lightning conductor on masonry structure using dowel.

Material: Versions PV 1h Cu are with wood screw of stainless steel.

CONDUCTOR SUPPORT FOR WALL

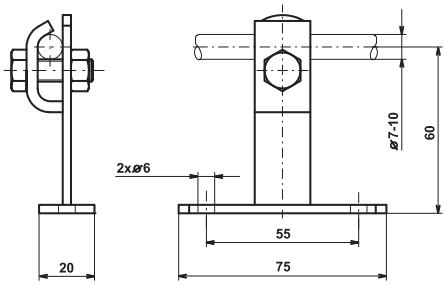

Made of	Marking	Weight (kg)	Package (pcs)	Code
H.D.G.	**PV 1s**	0,110	100	V167

Application: Fastening the lightning conductor for wall with screws or rivets.

CONDUCTOR SUPPORT FOR MASONRY

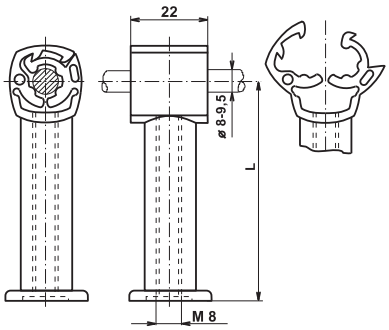

Marking	L (mm)	Weight (kg)	Package (pcs)	Code
PV 1p-20	20	0,008	50	Z600
PV 1p-30	30	0,009	50	Z605
PV 1p-55	55	0,010	50	Z610
PV 1p-20 Cu	20	0,008	50	Z615
PV 1p-30 Cu	30	0,009	50	Z620
PV 1p-55 Cu	55	0,010	50	Z625

Application: Fastening the lightning conductor (ø 8 mm wire or ø 9,5 mm rope) to masonry structure using a screws and a dovels.

Material: Plastic – grey or cooper color.

CONDUCTOR SUPPORT UNDER ROOFING TILE

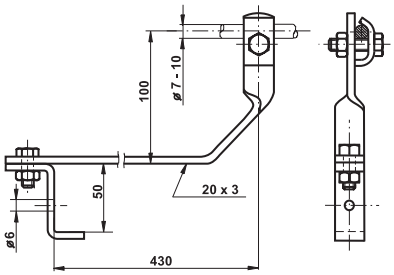

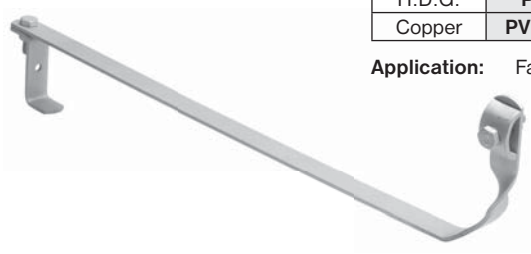

Made of	Marking	Weight (kg)	Package (pcs)	Code
H.D.G.	**PV 11**	0,378	25	V170
Copper	**PV 11 Cu**	0,417	1	V765

Application: Fastening the conductor on tilled roofs.

CONDUCTOR SUPPORT UNDER ROOFING TILE

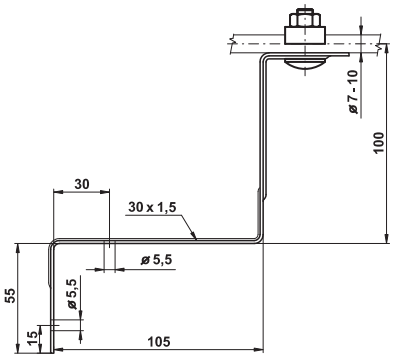

Made of	Marking	Weight (kg)	Package (pcs)	Code
H.D.G.	**PV 11b**	0,191	50	V175
Copper	**PV 11b Cu**	0,200	1	V770
Inox	**PV 11b N**	0,150	1	VN2170

Application: Fastening the conductor on tilled roofs (fastening the support behind the first roofing lath).

CONDUCTOR SUPPORT UNDER ROOFING TILE

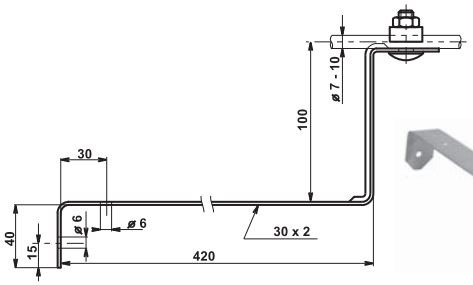

Made of	Marking	Weight (kg)	Package (pcs)	Code
H.D.G.	**PV 11c**	0,329	25	V177
Copper	**PV 11c Cu**	0,345	1	V772
Inox	**PV 11c N**	0,234	1	VN2172

Application: Fastening the conductor on tilled roofs.

CONDUCTOR SUPPORT UNDER ROOFING TILE

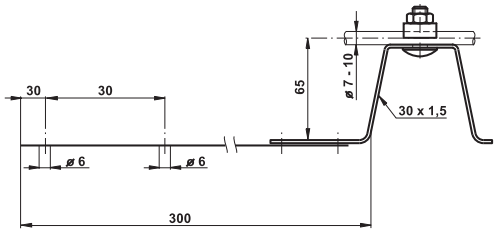

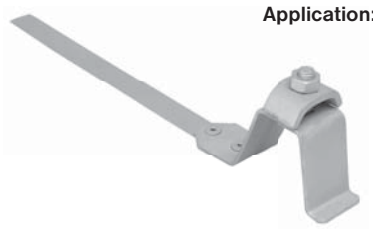

Made of	Marking	Weight (kg)	Package (pcs)	Code
H.D.G.	**PV 11d**	0,191	50	V178
Copper	**PV 11d Cu**	0,200	1	V773

Application: Fastening the conductor on tilled roofs (fastening the support behind the first roofing lath).

CONDUCTOR SUPPORT UNDER SLOPED ROOFING TILE

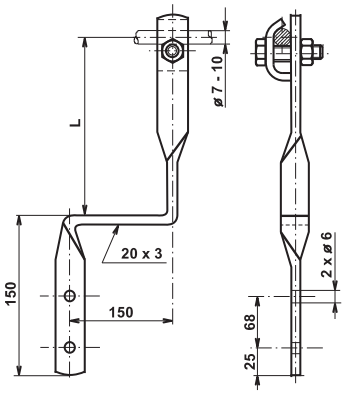

Made of	Marking	L (mm)	Weight (kg)	Package (pcs)	Code
H.D.G.	**PV 12**	100	0,243	50	V180
Copper	**PV 12 Cu**	100	0,272	1	V775
H.D.G.	**PV 13**	150	0,270	50	V185
Copper	**PV 13 Cu**	150	0,326	1	V780

Application: Fastening the conductor on tilled roofs.

CONDUCTOR SUPPORT UNDER RIDGE TILE

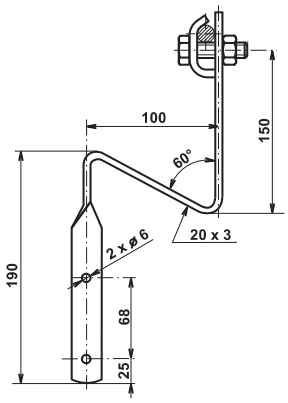

Made of	Marking	Weight (kg)	Package (pcs)	Code
H.D.G.	**PV 14**	0,273	50	V190
Copper	**PV 14 Cu**	0,290	1	V785

Application: Fastening the lightning conductor at the top of the roof.

CONDUCTOR SUPPORT AT THE TOP OF RIDGE TILE

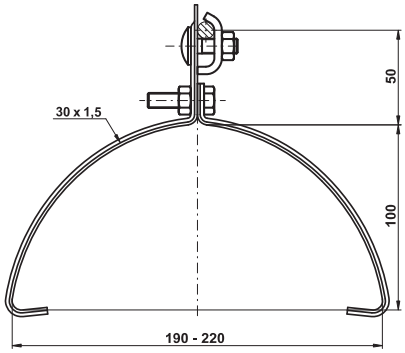

Made of	Marking	Weight (kg)	Package (pcs)	Code
H.D.G.	**PV 15a**	0,265	50	V195
Copper	**PV 15a Cu**	0,288	1	V790
Inox	**PV 15a N**	0,200	1	VN2190

Application: Fastening the lightning conductor at the top of the roof.

CONDUCTOR SUPPORT AT THE TOP OF RIDGE TILE

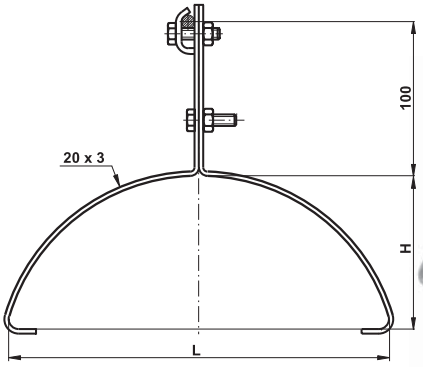

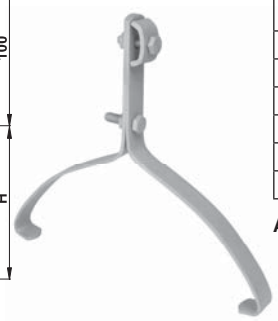

Made of	Marking	L/H (mm)	Weight (kg)	Package (pcs)	Code
H.D.G.	**PV 15b**	250-270/100	0,350	50	V200
Copper	**PV 15b Cu**	250-270/100	0,384	1	V795
Inox	**PV 15b N**	250-270/100	0,345	1	VN2195
H.D.G.	**PV 15c**	190-220/70	0,310	50	V205
Copper	**PV 15c Cu**	190-220/70	0,334	1	V800
Inox	**PV 15c N**	190-220/70	0,332	1	VN2200

Application: Fastening the lightning conductor at the top of the roof.

ADJUSTABLE CONDUCTOR SUPPORT AT THE TOP OF RIDGE TILE

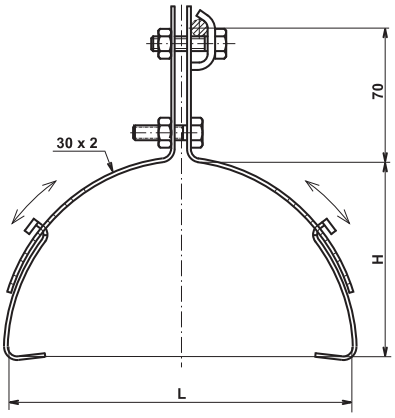

Made of	Marking	L/H (mm)	Weight (kg)	Package (pcs)	Code
H.D.G.	**PV 15d**	120-200/60-100	0,260	50	V210
	PV 15e	180-280/90-130	0,329	40	V215
Copper	**PV 15d Cu**	120-200/60-100	0,282	1	V805
	PV 15e Cu	180-280/90-130	0,360	1	V810
Inox	**PV 15d N**	120-200/60-100	0,200	1	VN2205
	PV 15e N	180-280/90-130	0,247	1	VN2210

Application: Fastening the lightning conductor at the top of the roof (various ridge tiles).

Advantages: Easy assembly, adjustable, integral system.

CONDUCTOR SUPPORT AT THE TOP OF RIDGE TILE

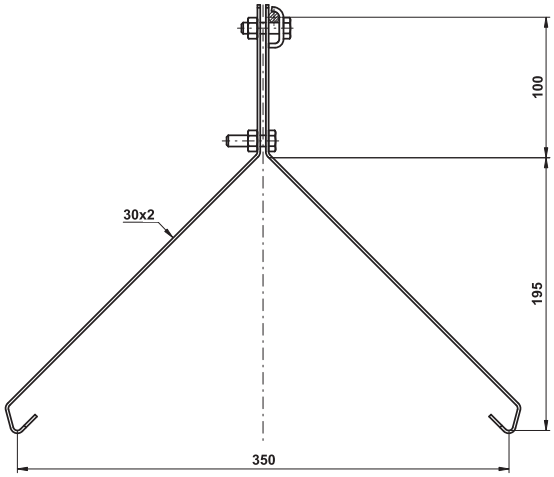

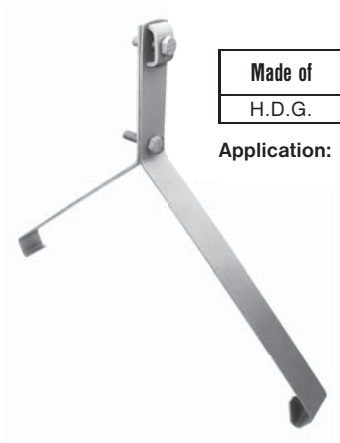

Made of	Marking	Weight (kg)	Package (pcs)	Code
H.D.G.	**PV 15f**	0,429	40	V216

Application: Fastening the lightning conductor at the top of the plastic shingle roofs.

CONDUCTOR SUPPORT

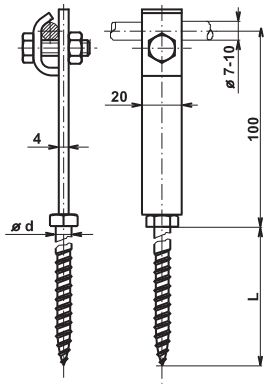

Made of	Marking	Screw ød / L (mm)	Weight (kg)	Package (pcs)	Code
H.D.G.	**PV 17**	8 / 100	0,147	100	V220
	PV 17p	8 / 160	0,163	50	V225
	PV 17pp	8 / 200	0,175	50	V230
	PV 17ppp	8 / 250	0,179	50	V231
	PV 17pppp	8 / 300	0,192	50	V232
Copper	**PV 17 Cu**	8 / 100	0,175	1	V815
	PV 17p Cu	8 / 160	0,194	1	V816
	PV 17pp Cu	8 / 200	0,205	1	V817
Inox	**PV 17 N**	8 / 100	0,145	1	VN2215
	PV 17p N	8 / 160	0,160	1	VN2216
	PV 17pp N	8 / 200	0,173	1	VN2217

Application: Fastening the conductor on corrugated surface (eternite) or using the dowels to structure walls.

Material: Versions PV 17p Cu and PV 17pp Cu are with wood screw of stainless steel.

CONDUCTOR SUPPORT TO WOODEN CONSTRUCTIONS

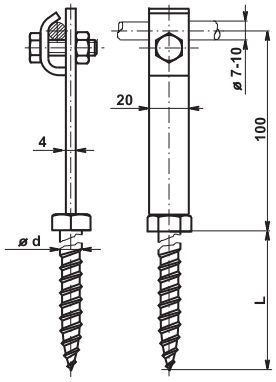

Made of	Marking	Screw ød / L (mm)	Weight (kg)	Package (pcs)	Code
H.D.G.	**PV 18**	12 / 100	0,200	50	V235

Application: Fastening the conductor to wooden construction.

CONDUCTOR SUPPORT FOR FLAT ROOFS

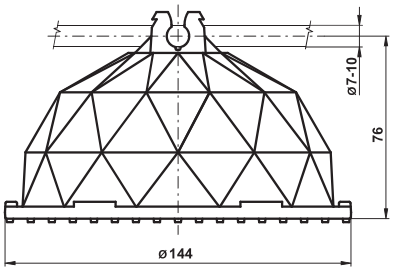

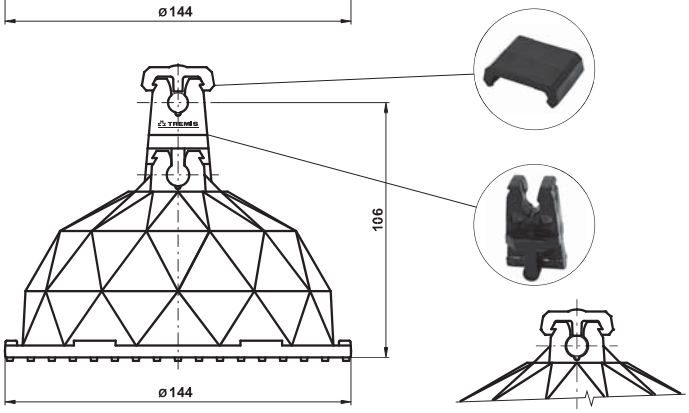

Marking	Weight (kg)	Package (pcs)	Code
PV 21c	0,910	25	V250
Attachment PV 21c	0,010	20	VS100
Lid PV 21c	0,002	50	VS105

Application: Fastening the conductor on flat roofs. Attachment increase the distance between round conductor and flat roof.
Lid is for additional fixing round conductor in the conductor support.

Material: Plastic (PE with UV stabilization) with gravel filling.

CONDUCTOR SUPPORT FOR FLAT ROOFS

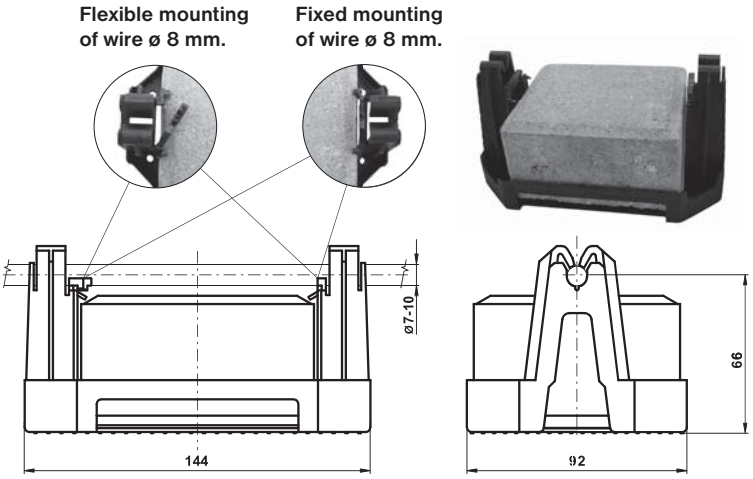

Marking	Weight (kg)	Package (pcs)	Code
PV 21d	0,957	10	V251
PV 21d - plastic	0,038	10	V252

Application: Fastening the conductor on flat roofs.

Material: Plastic (stabilized PE against UV radiation) fixed with concrete block.

Advantages: The support allows both free and fix connection of wire ø 8 mm.

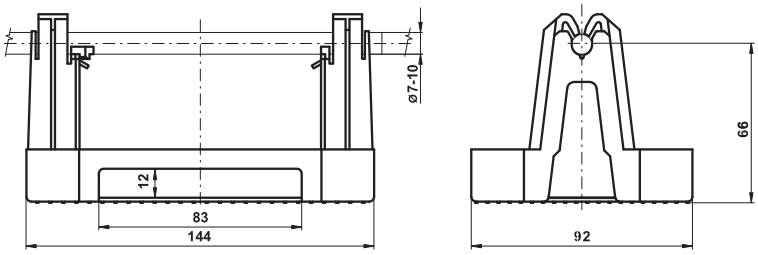

CONDUCTOR SUPPORT UNDER ROOFING TILE

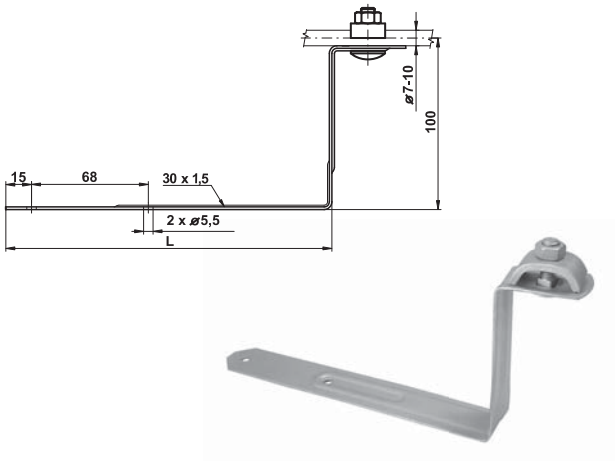

Made of	Marking	L (mm)	Weight (kg)	Package (pcs)	Code
H.D.G.	**PV 22a**	190	0,206	50	V255
	PV 22ap	290	0,251	50	V260
Copper	**PV 22a Cu**	190	0,220	1	V820
	PV 22ap Cu	290	0,273	1	V825
Inox	**PV 22a N**	190	0,167	1	VN2220
	PV 22ap N	290	0,203	1	VN2225

Application: Fastening the conductor on roofing tiles, shingles and eternite roofs.

Advantages: Lightning conductor can be entrapped from roof under selected angle.

CONDUCTOR SUPPORT UNDER ROOFING TILE

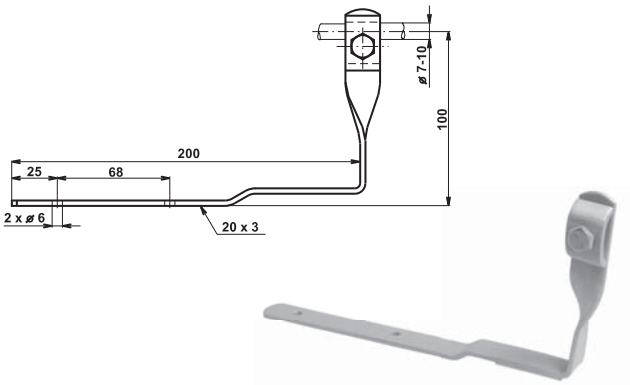

Made of	Marking	Weight (kg)	Package (pcs)	Code
H.D.G.	**PV 22b**	0,195	50	V265
Copper	**PV 22b Cu**	0,212	1	V830
Inox	**PV 22b N**	0,190	1	VN2230

Application: Fastening the conductor on roofing tiles and eternite roofs.

CONDUCTOR SUPPORT FOR SHEET METAL ROOFS

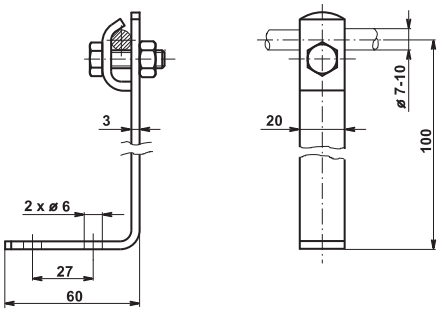

Made of	Marking	Weight (kg)	Package (pcs)	Code
H.D.G.	**PV 23**	0,147	100	V270
Copper	**PV 23 Cu**	0,154	1	V835
Inox	**PV 23 N**	0,140	1	VN2235

Application: Fastening the conductor on sheet metal roofs.

CONDUCTOR SUPPORT FOR A METAL CONSTRUCTIONS

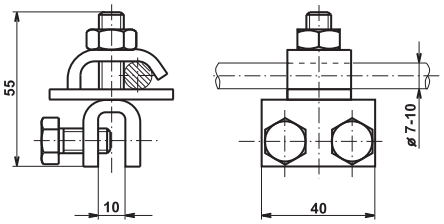

Made of	Marking	Weight (kg)	Package (pcs)	Code
H.D.G.	**PV 32**	0,171	100	V275
Copper	**PV 32 Cu**	0,187	1	V840
Inox	**PV 32 N**	0,165	1	VN2240

Application: Fastening the conductor to metal constructions.

TAPE CONDUCTOR SUPPORT FOR MASONRY

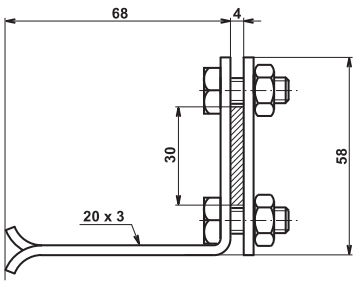

Made of	Marking	Weight (kg)	Package (pcs)	Code
H.D.G.	**PV 42**	0,112	100	V280
Copper	**PV 42 Cu**	0,122	1	V845

Application: Fastening the grounding tape to masonry structure.

TAPE CONDUCTOR SUPPORT FOR CONSTRUCTIONS

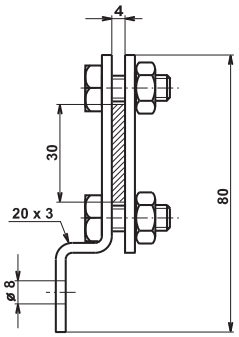

Made of	Marking	Weight (kg)	Package (pcs)	Code
H.D.G.	**PV 44**	0,091	100	V285
Copper	**PV 44 Cu**	0,102	1	V895

Application: Fastening the grounding tape to steel constructions.

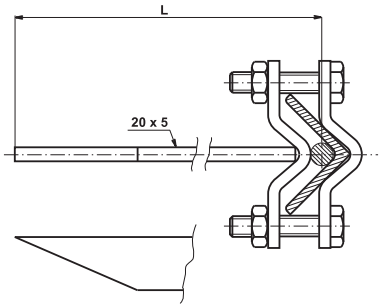

HOLDER OF PROTECTIVE ANGLE STEEL

Made of	Marking	Length L (mm)	Weight (kg)	Package (pcs)	Code
H.D.G.	**DOUa-15**	150	0,238	50	V290
	DOUa-20	200	0,282	50	V295
	DOUa-25	250	0,317	50	V300
Copper	**DOUa-15 Cu**	150	0,253	1	V900
	DOUa-20 Cu	200	0,297	1	V905
	DOUa-25 Cu	250	0,336	1	V910

Application: Fastening the protective angle steel to a various wall structure.

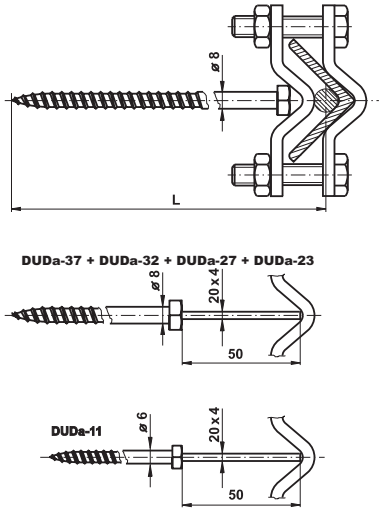

HOLDER OF PROTECTIVE ANGLE STEEL

Made of	Marking	Length L (mm)	Weight (kg)	Package (pcs)	Code
H.D.G.	**DUDa-11**	110	0,187	100	V302
	DUDa-18	180	0,189	50	V305
	DUDa-22	220	0,204	50	V310
	DUDa-27	270	0,239	50	V312
	DUDa-32	320	0,247	50	V313
	DUDa-37	370	0,259	50	V311
Copper	**DUDa-18 Cu**	180	0,225	1	V913
	DUDa-22 Cu	220	0,230	1	V916
	DUDa-23 Cu	230	0,237	1	V914
	DUDa-27 Cu	270	0,248	1	V917
Inox	**DUDa-18 N**	180	0,152	1	VN2313
	DUDa-22 N	220	0,169	1	VN2314
	DUDa-23 N	230	0,189	1	VN2315
	DUDa-27 N	270	0,236	1	VN2316

Application: Fastening the protective angle steel to wooden structures or to masonry structures using dowels.

Material : Versions DUDa-18 Cu, DUDa-22 Cu, DUDa-23 Cu and DUDa-27 Cu are with wood screw of stainless steel. Version DUDa-11 is with wood screw ø 6/50 mm.

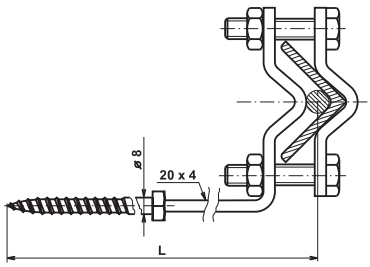

HOLDER OF PROTECTIVE ANGLE STEEL

Made of	Marking	Length L (mm)	Weight (kg)	Package (pcs)	Code
H.D.G.	**DUDb**	200	0,228	50	V315
Copper	**DUDb Cu**	200	0,272	1	V915

Application: Fastening the protective angle steel to wooden structures or to masonry structures using dowels.

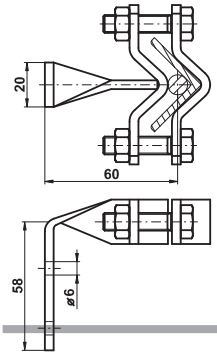

HOLDER OF PROTECTIVE ANGLE STEEL FOR THE WALL

Made of	Marking	Length L (mm)	Weight (kg)	Package (pcs)	Code
H.D.G.	**DUS**	60	0,191	100	V314

Application: Fastening the protective angle steel to a various wall structure.

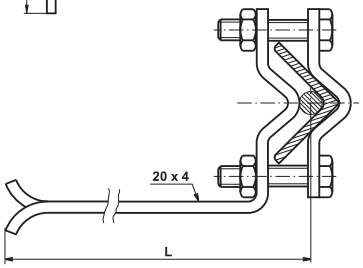

HOLDER OF PROTECTIVE ANGLE STEEL FOR MASONRY

Made of	Marking	Length L (mm)	Weight (kg)	Package (pcs)	Code
H.D.G.	**DUZ**	170	0,235	50	V320
Copper	**DUZ Cu**	170	0,251	1	V920

Application: Fastening the protective angle steel to masonry structures.

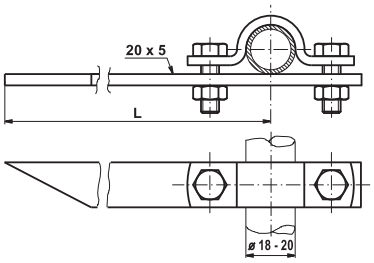

HOLDER OF RECEIVING ROD AND PROTECTIVE PIPE

Made of	Marking	Length L (mm)	Weight (kg)	Package (pcs)	Code
H.D.G.	**DJT**	200	0,250	50	V325
Copper	**DJT Cu**	200	0,276	1	V925

Application: Fastening of receiving rods or protective pipes to a various wall structure.

HOLDER OF RECEIVING ROD AND PROTECTIVE PIPE

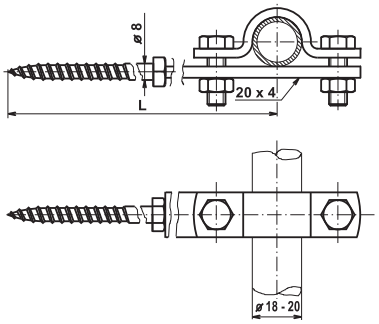

Made of	Marking	Length L (mm)	Weight (kg)	Package (pcs)	Code
H.D.G.	**DJD**	200	0,174	50	V330
	DJDp	260	0,190	50	V335
	DJDpp	300	0,204	50	V340
	DJDppp	350	0,218	50	V339
	DJDpppp	400	0,234	50	V338
Copper	**DJD Cu**	200	0,238	1	V930
	DJDp Cu	260	0,257	1	V931
	DJDpp Cu	300	0,269	1	V936
Inox	**DJD N**	200	0,156	1	VN2330
	DJDp N	260	0,174	1	VN2331
	DJDpp N	300	0,188	1	VN2332

Application: Fastening of receiving rods or protective pipes to wooden structures or masonry structures using dowels.

Material : Versions DJDp Cu and DJDpp Cu are with wood screw of stainless steel.

HOLDER OF RECEIVING ROD AND PROTECTIVE PIPE

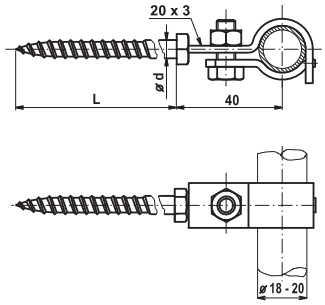

Made of	Marking	Screw ød / L (mm)	Weight (kg)	Package (pcs)	Code
H.D.G.	**DJDh**	6 / 50	0,090	50	V341
	DJDb	8 / 100	0,116	50	V342
	DJDbp	8 / 160	0,132	50	V343
	DJDbpp	8 / 200	0,143	50	V344
Copper	**DJDh Cu**	6 / 50	0,131	1	V932
	DJDb Cu	8 / 100	0,148	1	V933
	DJDbp Cu	8 / 160	0,161	1	V934
	DJDbpp Cu	8 / 200	0,170	1	V937

Application: Fastening of receiving rods or protective pipes to wooden structures or masonry structures using dowels.

Material : Versions DJDbp Cu and DJDbpp Cu are with wood screw of stainless steel.

HOLDER OF RECEIVING ROD AND PROTECTIVE PIPE

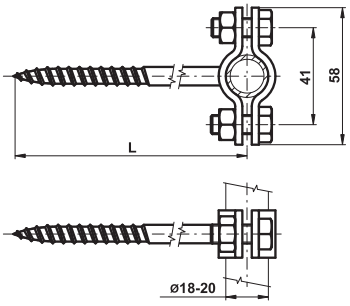

Made of	Marking	L (mm)	Weight (kg)	Package (pcs)	Code
H.D.G.	**DJDc**	110	0,111	50	V347
	DJDcp	170	0,128	50	V348
	DJDcpp	210	0,139	50	V349
	DJDcppp	260	0,156	50	V328
	DJDcpppp	310	0,168	50	V329
Inox	**DJDc N**	110	0,105	1	VN2340
	DJDcp N	170	0,121	1	VN2341
	DJDcpp N	210	0,131	1	VN2342

Application: Fastening of receiving rods, protective pipes and insertion rods to masonry structures using dowels.

HOLDER OF RECEIVING ROD AND PROTECTIVE PIPE

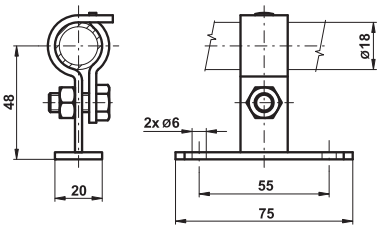

Made of	Marking	L (mm)	Weight (kg)	Package (pcs)	Code
H.D.G.	**DJSb**	50	0,110	50	V346

Application: Fastening of receiving rods, protective pipes and insertion rods to a various wall structure.

UPPER PROTECTIVE ROOF

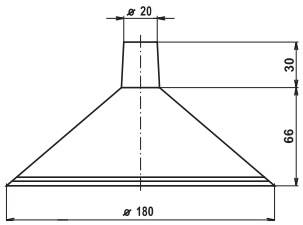

Made of	Marking	Weight (kg)	Package (pcs)	Code
H.D.G.	**OSH**	0,183	1	V350
Copper	**OSH Cu**	0,174	1	V940

Application: Protects the clamp on receiving rod against weather conditions.

LOWER PROTECTIVE ROOF

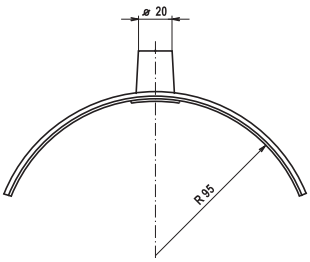

Made of	Marking	Weight (kg)	Package (pcs)	Code
H.D.G.	**OSD**	0,230	1	V355
Copper	**OSD Cu**	0,219	1	V945

Application: Protects the double sloping roof against bunging up in the place of fastening the receiving rod.

PROTECTIVE ANGLE STEEL

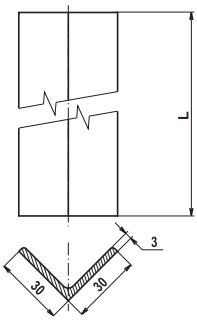

Made of	Marking	L (mm)	Weight (kg)	Package (pcs)	Code
H.D.G.	**OU 1,7**	1700	2,55	1	V360
	OU 2,0	2000	3,00	1	V365
Copper	**OU 1,7 Cu**	1700	1,67	1	V950
	OU 2,0 Cu	2000	1,99	1	V955
Inox	**OU 1,7 N**	1700	1,45	1	VN2350

Application: Protects the conductor in the area just above the ground against mechanical damage.

PROTECTIVE PIPE

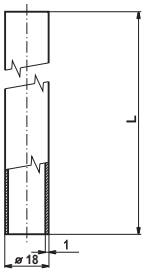

Made of	Marking	L (mm)	Weight (kg)	Package (pcs)	Code
H.D.G.	**OT 1,7**	1700	0,80	1	V370
Copper	**OT 1,7 Cu**	1700	0,91	1	V960
Inox	**OT 1,7 N**	1700	0,91	1	VN2360

Application: Protects the conductor in the area just above the ground against mechanical damage.

Material : Version OT 1,7 Cu is with pipe ø 20 mm.

INSERTION ROD

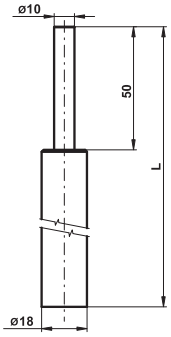

Made of	Marking	L (mm)	Weight (kg)	Package (pcs)	Code
H.D.G.	**TZ 1,5**	1500	3,0	1	V375
	TZ 2,0	2000	4,0	1	V377
Inox N V4A	**TZ 1,5 N V4A**	1500	2,9	1	VN2380

Application: Connecting down conductors to the earth-termination system.

RECEIVING ROD FOR RIDGE TILE

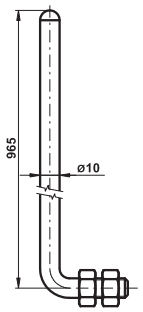

Made of	Marking	L (mm)	Weight (kg)	Package (pcs)	Code
AlMgSi	**JR PV 15**	965	0,233	1	VN2950

Application: Air termination rod located above the protected premises on stainles steel conductor supports of the ridge tile (PV 15a, b, c, d, e).

RECEIVING ROD WITH STRAIGHT END

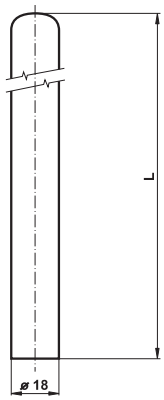

Made of	Marking	L (mm)	Weight (kg)	Package (pcs)	Code
H.D.G.	**JR 1,0**	1000	2,05	1	V380
	JR 1,5	1500	3,08	1	V385
	JR 2,0	2000	4,10	1	V390
	JR 3,0	3000	6,15	1	V395
	JR 4,0	4000	8,20	1	V396
	JR 5,0	5000	10,25	1	V397
	JR 6,0	6000	12,30	1	V398
Copper	**JR 1,0 Cu**	1000	2,26	1	V970
	JR 1,5 Cu	1500	3,38	1	V972
	JR 2,0 Cu	2000	4,51	1	V974
	JR 3,0 Cu	3000	6,76	1	V975
	JR 4,0 Cu	4000	9,04	1	V981
Inox	**JR 1,0 N**	1000	2,01	1	VN2400
	JR 1,5 N	1500	3,02	1	VN2405
	JR 2,0 N	2000	4,02	1	VN2410
	JR 3,0 N	3000	6,03	1	VN2411
AlMgSi	**JR 1,0 AlMgSi**	1000	0,70	1	VN3000
	JR 1,5 AlMgSi	1500	1,05	1	VN3005
	JR 2,0 AlMgSi	2000	1,40	1	VN3010
	JR 2,5 AlMgSi	2500	1,75	1	VN3012
	JR 3,0 AlMgSi	3000	2,10	1	VN3015
	JR 4,0 AlMgSi	4000	2,80	1	VN3020
	JR 5,0 AlMgSi	5000	3,50	1	VN3025
	JR 6,0 AlMgSi	6000	4,20	1	VN3030

Application: Air termination rod located above the protected premises.

RECEIVING ROD WITH FORGED TANG

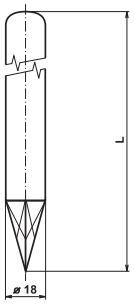

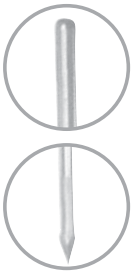

Made of	Marking	L (mm)	Weight (kg)	Package (pcs)	Code
H.D.G.	**JK 1,0**	1000	2,05	1	V400
	JK 1,5	1500	3,08	1	V405
	JK 2,0	2000	4,10	1	V410
Copper	**JK 1,0 Cu**	1000	2,26	1	V976
	JK 1,5 Cu	1500	3,38	1	V978
	JK 2,0 Cu	2000	4,51	1	V980
Inox	**JK 1,0 N**	1000	2,01	1	VN2415
	JK 1,5 N	1500	3,02	1	VN2420
	JK 2,0 N	2000	4,02	1	VN2425

Application: Air termination rod located above the protected premises.

RECEIVING ROD WITH SCREW

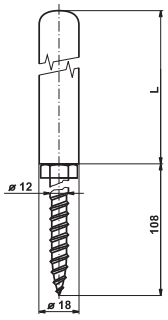

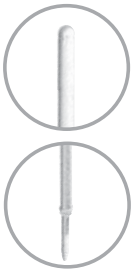

Made of	Marking	L (mm)	Weight (kg)	Package (pcs)	Code
H.D.G.	**JV 1,0**	1000	2,15	1	V415
	JV 1,5	1500	3,18	1	V420
	JV 2,0	2000	4,21	1	V425

Application: Air termination rod located above the protected premises.

RECEIVING ROD WITH STRAIGHT END 18/10

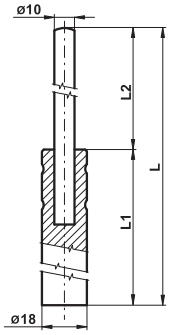

Made of	Marking	L (mm)	L1 /L2(mm)	Weight (kg)	Package (pcs)	Code
AlMgSi	JR 1,5 18/10 AlMgSi	1500	500/1000	0,56	1	VN3055
	JR 2,0 18/10 AlMgSi	2000	1000/1000	0,90	1	VN3060
	JR 2,5 18/10 AlMgSi	2500	1500/1000	1,25	1	VN3065
	JR 3,0 18/10 AlMgSi	3000	2000/1000	1,59	1	VN3070
	JR 4,0 18/10 AlMgSi	4000	3000/1000	2,28	1	VN3080

Application: Air termination rod located above the protected premises.

Material: Rod ø 18 mm AlMgSi with pressed rod ø 10 mm AlMgSi.

RECEIVING ROD WITH STRAIGHT END 18/10 – PIPE

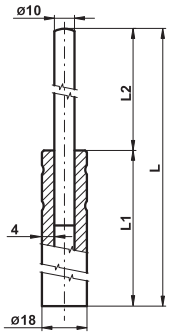

Made of	Marking	L (mm)	L1 /L2(mm)	Weight (kg)	Package (pcs)	Code
AlMgSi	JR 1,5 18/10t AlMgSi	1500	500/1000	0,45	1	VN3095
	JR 2,0 18/10t AlMgSi	2000	1000/1000	0,69	1	VN3100
	JR 2,5 18/10t AlMgSi	2500	1500/1000	0,93	1	VN3105
	JR 3,0 18/10t AlMgSi	3000	2000/1000	1,17	1	VN3110
	JR 4,0 18/10t AlMgSi	4000	3000/1000	1,65	1	VN3120

Application: Air termination rod located above the protected premises.

Material: Pipe ø 18 mm AlMgSi with pressed rod ø 10 mm AlMgSi.

RECEIVING ROD WITH STRAIGHT END – PIPE

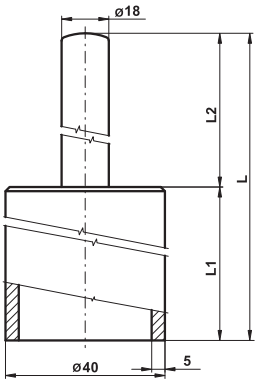

Made of	Marking	L (mm)	L1 /L2(mm)	Weight (kg)	Package (pcs)	Code
AlMgSi	JT 4,0 AlMgSi	4000	2000/2000	4,40	1	VN3035
	JT 5,0 AlMgSi	5000	3000/2000	5,90	1	VN3040
	JT 5,5 AlMgSi	5500	3000/2500	6,30	1	VN3045
	JT 6,0 AlMgSi	6000	3000/3000	6,60	1	VN3050

Application: Air termination rod located above the protected premises fastened to support stand SJ on flat roofs.

Material: Pipe ø 40 x 5 mm AlMgSi with pressed rod ø 18 mm AlMgSi.

CONCRETE STAND

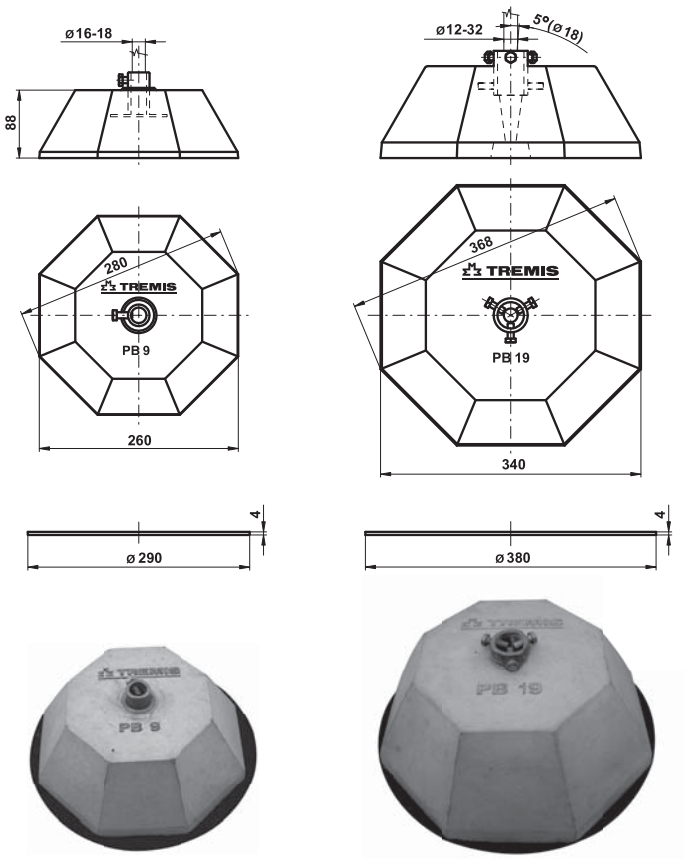

Marking	Weight (kg)	Package (pcs)	Code
PB 9	9	1	V535
Rest PB 9	0,249	1	V530
PB 19	19	1	V545
Rest PB 19	0,326	1	V540

Application: Fastening of receiving rod or isolating rod on flat roofs.

Material: Vibrating floated concrete, hot dip galvanized steel. Washer is from recycled rubber.

SUPPORT STAND FOR RECEIVING ROD

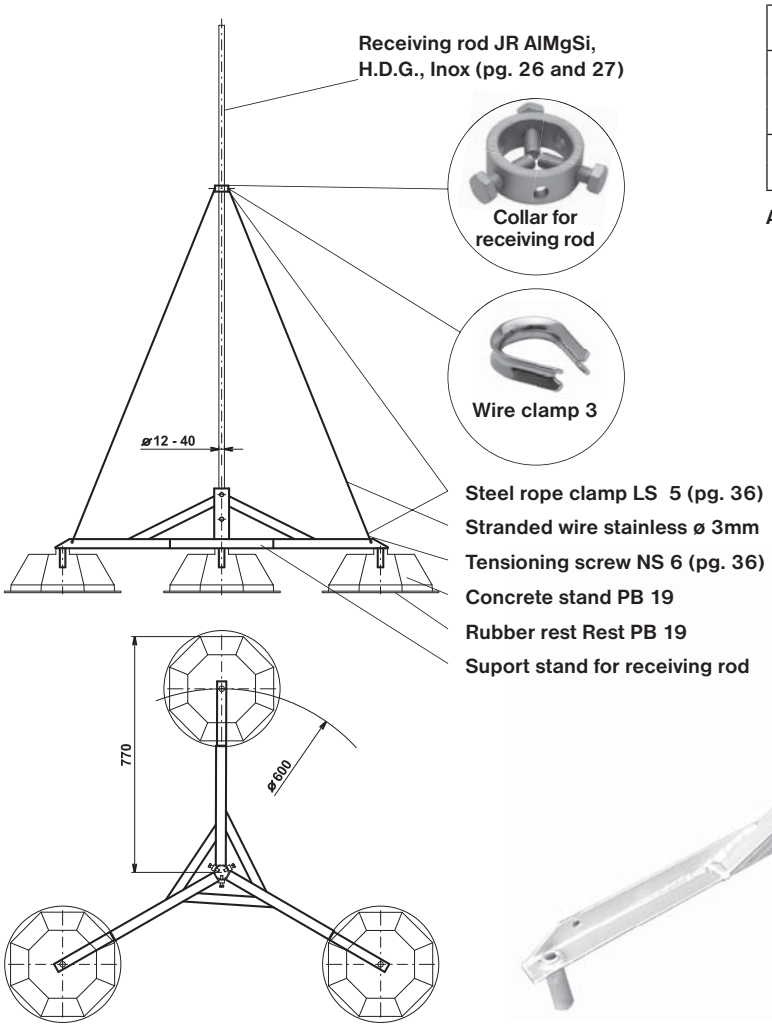

Made of	Marking	Weight (kg)	Package (pcs)	Code
H.D.G.	SJ	8,000	1	V546
	OJ	0,132	1	V547
	TS	0,176	1	V548
Inox	Wire clamp 3 N	0,002	1	Z985
	Stranded wire 3 N	0,032	1 m	Z980

Application: Fastening of receiving rod on flat roofs. On request of bigger stability is posible put two stands at each. The concrete stands and support stand is necessary connect with connecting rod TS in this event.

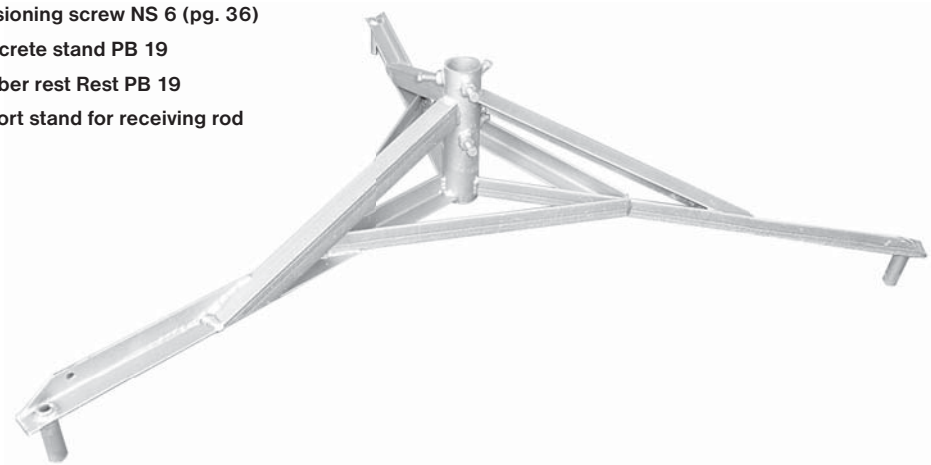

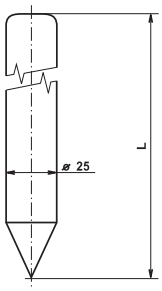

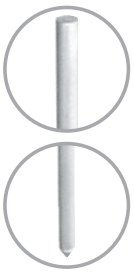

GROUNDING ROD

Made of	Marking	L (mm)	Weight (kg)	Package (pcs)	Code
H.D.G.	**ZT 1,0**	1000	3,78	1	V430
	ZT 1,5	1500	5,93	1	V435
	ZT 2,0	2000	7,77	1	V440
Copper	**ZT 1,0 Cu**	1000	4,26	1	V985
	ZT 1,5 Cu	1500	6,45	1	V988
	ZT 2,0 Cu	2000	8,57	1	V990

Application: Enables the discharge to pass to the conductive ground layers.

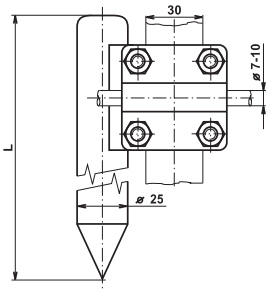

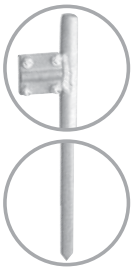

GROUNDING ROD WITH CLAMP

Made of	Marking	L (mm)	Weight (kg)	Package (pcs)	Code
H.D.G.	**ZT 1,0s**	1000	4,03	1	V445
	ZT 1,5s	1500	5,98	1	V450
	ZT 2,0s	2000	7,86	1	V455

Application: Enables the discharge to pass to the conductive ground layers.
Advantages: Saves the clamps for grounding rods.
Enables the parallel as well as cross connections with tape or round conductors.

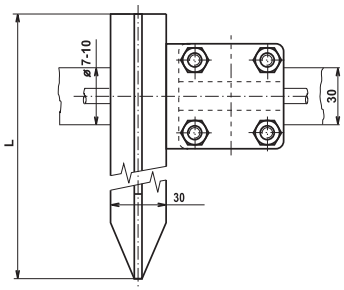

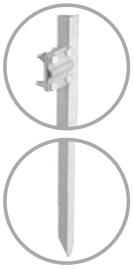

"T" PROFILE GROUNDING ROD

Made of	Marking	L (mm)	Weight (kg)	Package (pcs)	Code
H.D.G.	**ZT 1,0t**	1000	2,06	1	V460
	ZT 1,5t	1500	2,97	1	V465
	ZT 2,0t	2000	3,92	1	V470

Application: Enables the discharge to pass to the conductive ground layers.
Advantages: Larger connection surface in comparison with round rod of the same length (1,4x). The value of ground resistance depends on the size of connection surface.

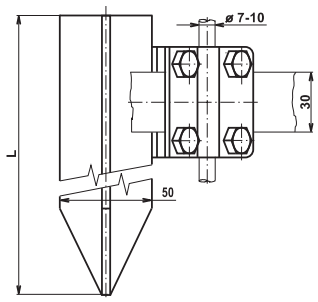

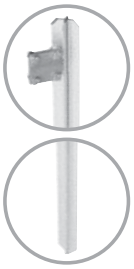

CROSS PROFILE GROUNDING ROD

Made of	Marking	L (mm)	Weight (kg)	Package (pcs)	Code
H.D.G.	**ZT 1,0k**	1000	2,54	1	V471
	ZT 1,5k	1500	3,81	1	V472
	ZT 2,0k	2000	5,08	1	V473

Application: Enables the discharge to pass to the conductive ground layers.
Advantages: Significantly larger connection surface in comparison with round rod of the same length (2,4x) and in comparison to T profile rod of the same lenght (1,7x). The value of ground resistance depends on the size of connection surface.

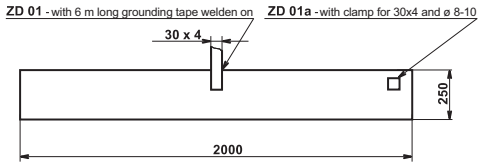

GROUNDING PLATE

Made of	Marking	L (mm)	Weight (kg)	Package (pcs)	Code
H.D.G.	**ZD 01**	2000x250	14,50	1	V475
	ZD 01a	2000x250	8,27	1	V480

Application: Enables the discharge to pass to the conductive ground layers.

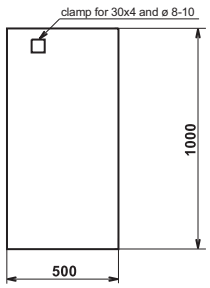

GROUNDING PLATE

Made of	Marking	L (mm)	Weight (kg)	Package (pcs)	Code
H.D.G.	**ZD 02**	1000x500	8,27	1	V485

Application: Enables the discharge to pass to the conductive ground layers.

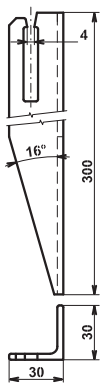

TAPE HOLDER

Made of	Marking	Weight (kg)	Package (pcs)	Code
H.D.G.	**DP**	0,383	50	V570

Application: For installing earth tape conductor in the foundation level.

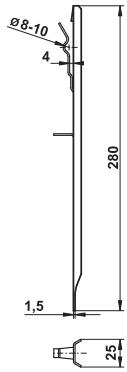

TAPE HOLDER

Made of	Marking	Weight (kg)	Package (pcs)	Code
Fe/Zn	**DPb**	0,094	50	V571

Application: For installing earth tape conductor 30 (40) x 4 mm or round conductor ø 10 (8) mm in the foundation level.

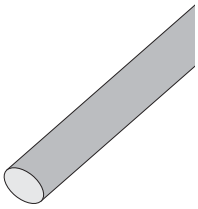

ROUND CONDUCTOR

Made of	Marking	ø (mm)	Package (pcs)	Code
H.D.G.	**Wire 8**	8	50	Z205
	Wire 10	10	50	Z215
	Wire 10/13 PVC	10	50	Z217
Copper	**Wire 7 Cu**	7	1-25	Z400
	Wire 8 Cu T/2	8	1-25	Z405
	Wire 8 Cu T/4	8	1-25	Z406
AlMgSi	**Wire 8 AlMgSi T/2**	8	1-20	Z414
	Wire 8 AlMgSi T/4	8	1-20	Z415
	Wire 8/11 AlMgSi PVC	8	1-20	Z417
Inox	**Wire 8 N**	8	1-50	Z420
Inox V4A	**Wire 10 V4A**	10	1-50	Z425

Application: Conductor for lightning conductor construction.

Material : The sign of wire T/2 – semi-hard. The sign of wire T/4 – soft.

STRANDED CONDUCTOR

Made of	Marking	ø (mm)	Package (pcs)	Code
H.D.G.	**Rope 25**	6,8	200 - 250	Z226
	Rope 35	7,8	200 - 250	Z228
	Rope 50	9,5	200	Z230
	Rope 70	11,5	200 - 250	Z232

Application: Conductor for lightning conductor construction.

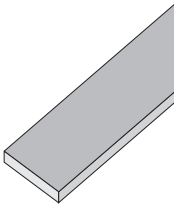

TAPE CONDUCTOR

Made of	Marking	Size (mm)	Package (pcs)	Code
H.D.G.	**Tape 20x3**	20x3	50	Z260
	Tape 30x4	30x4	20-25 (45-50)	Z250
Inox	**Tape 30x3,5 N**	30x3,5	20	Z430
Inox V4A	**Tape 30x3,5 N V4A**	30x3,5	20	Z435

Application: Construction bonding grounding system.

"T" HOLDER FOR ISOLATED AIR-TERMINATION SYSTEM

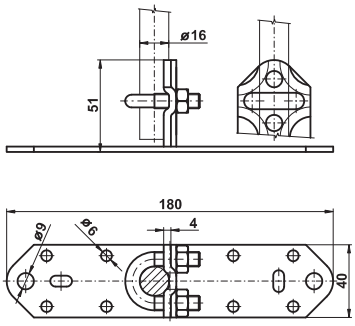

Made of	Marking	Weight (kg)	Package (pcs)	Code
H.D.G.	**DOHS**	0,238	50	VP001

Application: Fixing plate for spacer bar parallel or across to the wall of building.

"T" HOLDER WITH HINGE FOR ISOLATED AIR-TERMINATION SYSTEM

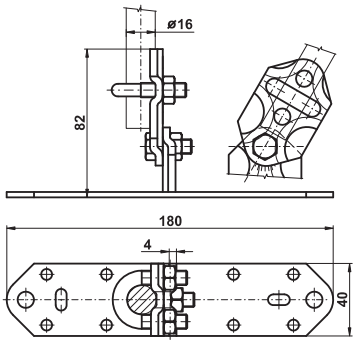

Made of	Marking	Weight (kg)	Package (pcs)	Code
H.D.G.	**DOHSK**	0,303	50	VP005

Application: Fixing plate for spacer bar to the wall of building with adjustable angle.

"L" HOLDER FOR ISOLATED AIR-TERMINATION SYSTEM

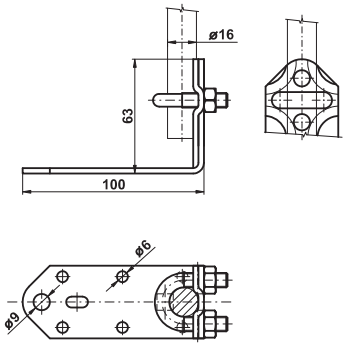

Made of	Marking	Weight (kg)	Package (pcs)	Code
H.D.G.	**DOHL**	0,153	50	VP010

Application: Fixing plate for spacer bar parallel or across to the wall of building.

"L" HOLDER WITH HINGE FOR ISOLATED AIR-TERMINATION SYSTEM

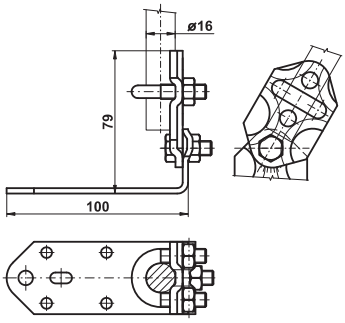

Made of	Marking	Weight (kg)	Package (pcs)	Code
H.D.G.	**DOHLK**	0,213	50	VP015

Application: Fixing plate for spacer bar to the wall of building with adjustable angle.

HOLDER CORNER FOR ISOLATED AIR-TERMINATION SYSTEM

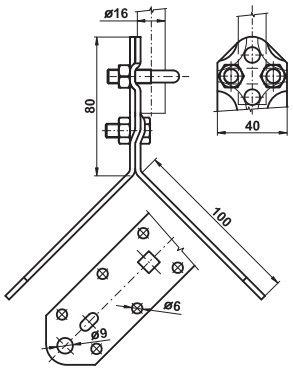

Made of	Marking	Weight (kg)	Package (pcs)	Code
H.D.G.	**DOHR**	0,285	50	VP020

Application: Fixing plate for spacer bar parallel or across to the corner of building.

HOLDER CORNER WITH HINGE FOR ISOLATED AIR-TERMINATION SYSTEM

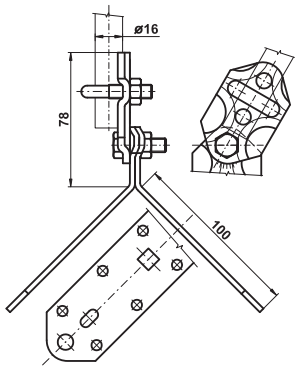

Made of	Marking	Weight (kg)	Package (pcs)	Code
H.D.G.	**DOHRK**	0,319	50	VP025

Application: Fixing plate for spacer bar parallel or across to the corner of building with adjustable angle.

HOLDER ANGLE FOR ISOLATED AIR-TERMINATION SYSTEM

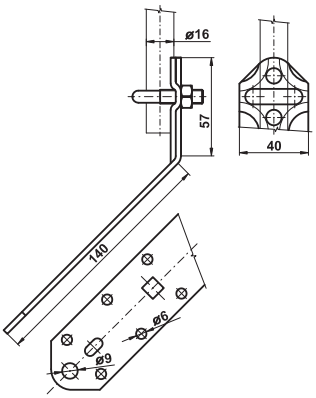

Made of	Marking	Weight (kg)	Package (pcs)	Code
H.D.G.	**DOHU**	0,188	50	VP030

Application: Fixing plate for spacer bar parallel or across to the corner of building.

HOLDER ANGLE WITH HINGE FOR ISOLATED AIR-TERMINATION SYSTEM

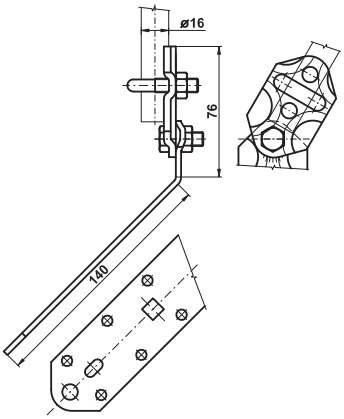

Made of	Marking	Weight (kg)	Package (pcs)	Code
H.D.G.	**DOHUK**	0,251	50	VP035

Application: Fixing plate for spacer bar parallel or across to the corner of building with adjustable angle.

HOLDER FOR RECEIVING RODE WITH HINGE FOR ISOLATED AIR-TERMINATION SYSTEM

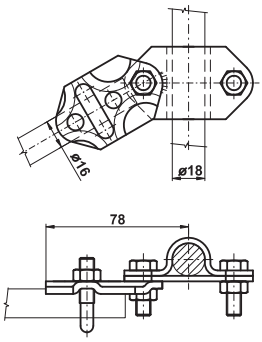

Made of	Marking	Weight (kg)	Package (pcs)	Code
H.D.G.	**DOHJK**	0,268	50	VP040

Application: Rod holder for spacer bar with adjustable angle.

HOLDER OF PIPE FOR ISOLATED AIR-TERMINATION SYSTEM

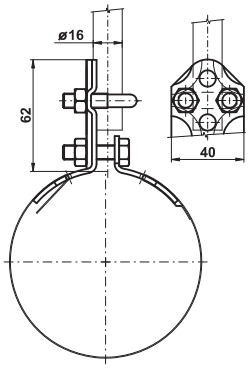

Made of	Marking	Weight (kg)	Package (pcs)	Code
H.D.G.	**DOHT**	0,150	50	VP045
	Tape Inox	0,060	1 m	V105

Application: Fixing plate for spacer bar parallel or across to the pipe. Use of flexible stainless steel tape enables universal use of this kind of clamp for several diameters of pipe.

HOLDER WITH HINGE OF PIPE FOR ISOLATED AIR-TERMINATION SYSTEM

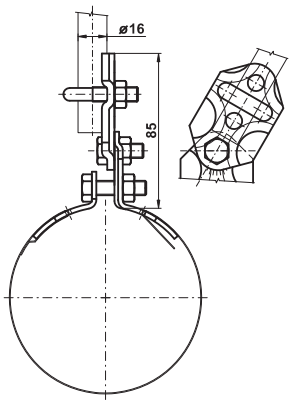

Made of	Marking	Weight (kg)	Package (pcs)	Code
H.D.G.	**DOHTK**	0,209	50	VP050
	Tape Inox	0,060	1 m	V105

Application: Fixing plate for spacer bar parallel or across to the pipe with adjustable angle. Use of flexible stainless steel tape enables universal use of this kind of clamp for several diameters of pipe.

HOLDER OF PIPE FOR ISOLATED AIR-TERMINATION SYSTEM

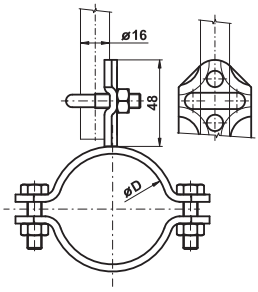

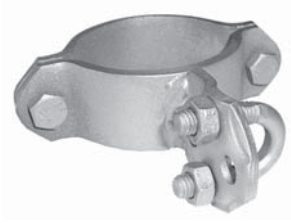

Made of	Marking	øD (mm)	Js (")	Weight (kg)	Package (pcs)	Code
H.D.G.	**DOHT 1**	18 - 22	1/2	0,229	50	VP055
	DOHT 2	23 - 27	3/4	0,243	50	VP060
	DOHT 3	28 - 34	1	0,264	50	VP065
	DOHT 4	35 - 43	1 1/4	0,295	50	VP070
	DOHT 5	44 - 49	1 1/2	0,314	50	VP075
	DOHT 6	50 - 61	2	0,343	50	VP080
	DOHT 7	67 - 77	2 1/2	0,393	50	VP085
	DOHT 8	81 - 90	3	0,427	50	VP090
	DOHT 9	106 - 115	4	0,511	50	VP095

Application: Fixing plate for spacer bar parallel or across to the pipe.

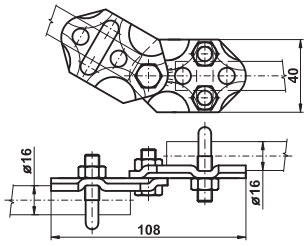

HINGE FOR ISOLATED AIR-TERMINATION SYSTEM

Made of	Marking	Weight (kg)	Package (pcs)	Code
H.D.G.	**KOH**	0,202	50	VP100

Application: Bar holder for bracing bar between spacers.

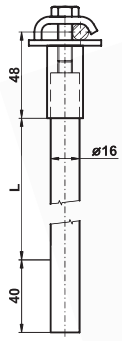

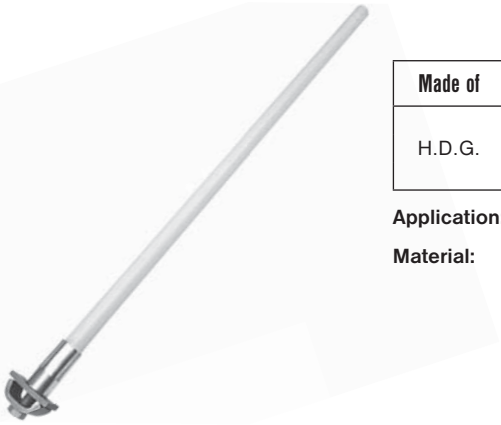

ISOLATING ROD FOR CONDUCTOR

Made of	Marking	L (mm)	Weight (kg)	Package (pcs)	Code
H.D.G.	**ITV 43**	430	0,276	50	VP105
	ITV 68	680	0,374	50	VP110
	ITV 93	930	0,473	50	VP115

Application: Fastening conductor for contruction isolated air-termination system.

Material: Isolating rod made of glass fibre reinforced plastic (GFK), tips made of alluminium alloy, other parts made of H.D.G. steel.

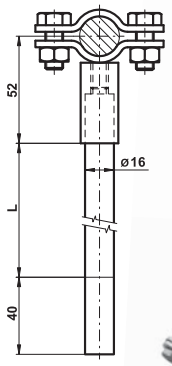

ISOLATING ROD FOR RECEIVING ROD

Made of	Marking	L (mm)	Weight (kg)	Package (pcs)	Code
H.D.G.	**ITJc 43**	430	0,300	1	VP155
	ITJc 68	680	0,398	1	VP160
	ITJc 93	930	0,497	1	VP165

Application: Fastening receiving rod for contruction isolated air-termination system.

Material: Isolating rod made of glass fi bre reinforced plastic (GFK), tips made of alluminium alloy, other parts made of H.D.G. steel.

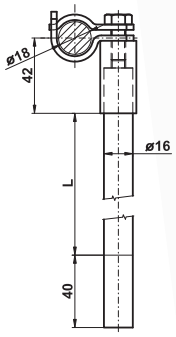

ISOLATING ROD FOR RECEIVING ROD

Made of	Marking	L (mm)	Weight (kg)	Package (pcs)	Code
H.D.G.	**ITJ 43**	430	0,277	50	VP120
	ITJ 68	680	0,375	50	VP125
	ITJ 93	930	0,474	50	VP130

Application: Fastening receiving rod for contruction isolated air-termination system.

Material: Isolating rod made of glass fibre reinforced plastic (GFK), tips made of alluminium alloy, other parts made of H.D.G. steel.

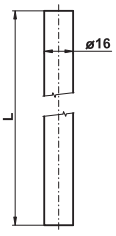

ISOLATING ROD

Made of	Marking	L (mm)	Weight (kg)	Package (pcs)	Code
Plastic GFK	**IT**	1000	0,394	1	VP135

Application: Installation of bracing bars between spacers for contruction isolated air-termination system.

Material: Isolating rod made of glass fibre reinforced plastic (GFK).

MARKING PLATE

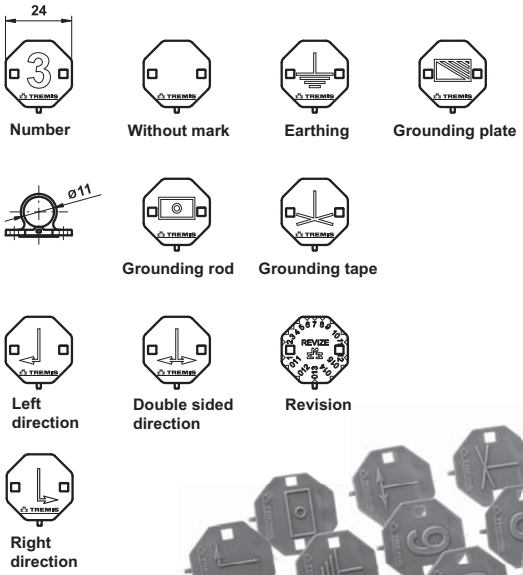

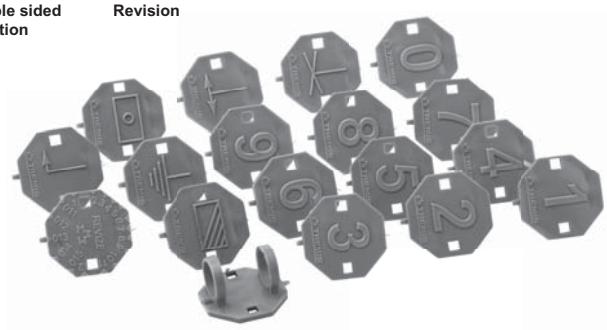

Marking	Weight (kg)	Package (pcs)	Code
Nr. 1	0,001	50	VS001
Nr. 2	0,001	50	VS005
Nr. 3	0,001	50	VS010
Nr. 4	0,001	50	VS015
Nr. 5	0,001	50	VS020
Nr. 6	0,001	50	VS025
Nr. 7	0,001	50	VS030
Nr. 8	0,001	50	VS035
Nr. 9	0,001	50	VS040
Nr. 0	0,001	50	VS045
Without mark	0,001	50	VS050
Earthing	0,001	50	VS055
Grounding plate	0,001	50	VS060
Grounding rod	0,001	50	VS065
Grounding tape	0,001	50	VS070
Left direction	0,001	50	VS075
Right direction	0,001	50	VS076
Double sided direction	0,001	50	VS080
Revision	0,001	50	VS085

Application: Marks the conductor and grounding.

Material: Plastic (stabilized PE against UV radiation) grey color.

WASHER

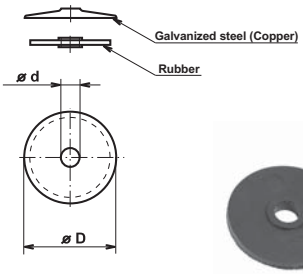

Made of	Marking	ø D/ø d (mm)	Weight (kg)	Package (pcs)	Code
Galvanized steel	Washer 8	38 / 8	0,008	100	Z 105
	Washer 6	26 / 6	0,004	100	Z 100
Copper	Washer 8 Cu	38 / 8	0,008	1	Z 305
	Washer 6 Cu	26 / 6	0,004	100	Z300
Inox	Washer 8 N	38 / 8	0,008	1	Z 107
	Washer 6 N	26 / 6	0,004	1	Z 102
Rubber	Washer 8 - rubber	38 / 8	0,003	100	Z106
	Washer 6 - rubber	25 / 6	0,001	100	Z101

Application: Screw gasket for PV 17, PV 1h, DUD and DJD.

WASHER PE

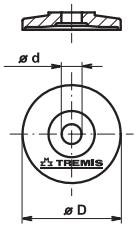

Marking	ø D / ø d (mm)	Weight (kg)	Package (pcs)	Code
Washer 8 PE	37 / 8	0,003	50	VS115
Washer 6 PE	27 / 6	0,001	100	VS110

Application: Screw gasket for PV 17, PV 1h, DUD and DJD.

Material: Plastic (stabilized PE against UV radiation) grey color.

COVERING PE

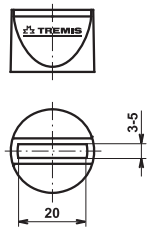

Marking	Weight (kg)	Package (pcs)	Code
Covering PV	0,002	50	VS120

Application: Covering weld for PV 17, PV 1h and DJD.

Material: Plastic (stabilized PE against UV radiation) grey color.

LEAD SHEET

Marking	Weight (kg)	Package (pcs)	Code
Plate Pb	250x0,5	20-25	Z450

Application: For corrosion - resistant connection of hot dip galvanized steel or aluminium and copper.

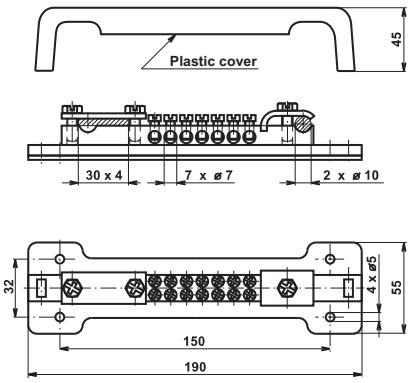

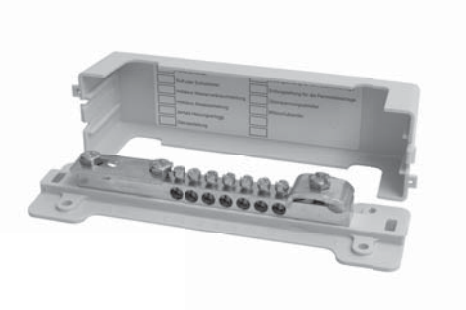

TERMINAL BOARD FOR MAIN CONNECTION

Marking	Weight (kg)	Package (pcs)	Code
Terminal board	0,252	1	Z780

Application: Main connection of neutral conductors and grounding.

Material: Terminal board, tin-coated brass, cover plastic.

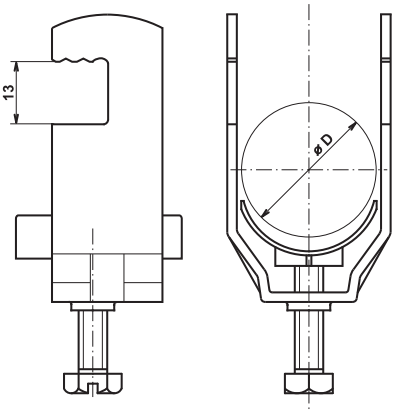

CABLE CLAMP „SONAP“

Marking	Cable ø D (mm)	Weight (kg)	Package (pcs)	Code
KP12b	8 - 12	0,031	100	Z500
KP16b	12 - 16	0,034	100	Z505
KP22b	16 - 22	0,040	100	Z510
KP28b	22 - 28	0,051	100	Z515
KP34b	28 - 34	0,066	100	Z520
KP40b	34 - 40	0,071	100	Z525
KP46b	40 - 46	0,083	100	Z530
KP52b	46 - 52	0,092	100	Z535
KP58b	52 - 58	0,124	100	Z540
KP64b	58 - 64	0,148	100	Z545

Application: Fastening the cables to steel constructions.

Material: Hot dip galvanized steel, plastic hod.

Advantages: Compression hod does not have sharp edges and therefore it is impossible to damage the compressed cables. Clamps are designed in order to be mounted one besides the other, which saves the space and cable bridges.

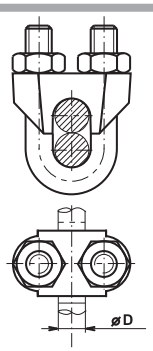

STEEL ROPE CLAMP

Marking	Cable ø D (mm)	Weight (kg)	Package (pcs)	Code
LS 5	3 - 5	0,014	25	Z695
LS 6	4 - 6	0,017	25	Z700
LS 8	6 - 8	0,030	10	Z705
LS 10	8 - 10	0,062	10	Z710

Application: Creation of clamping connections of ropes and wires.

Material: Galvanized malleable cast iron, the sttirup and nuts galvanized steel.

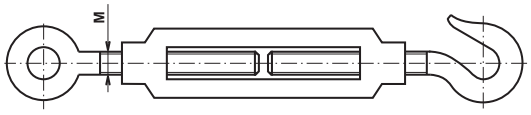

TENSIONING SCREW

Marking	Worm	Weight (kg)	Package (pcs)	Code
NS 6	M 6	0,131	1	Z745
NS 10	M 10	0,336	1	Z750
NS 12	M 12	0,530	1	Z755
NS 16	M 16	0,879	1	Z760

Application: Tensioning of ropes and wires.

Material: Galvanized malleable cast iron.

WIRE STRAIGHTENER

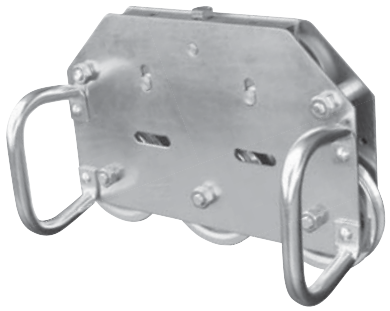

Marking	Weight (kg)	Package (pcs)	Code
Straightener	5,900	1	Z785

Application: Wire straightener is used for straightening of wire of diameter from 7 to 10 mm made of materials H.D.G., Copper, AlMgSi. The overall amount of pulleys is 5, where 2 of these are adjustable.

STRAIGHTENER TOOLED – 2 pegs

Marking	Weight (kg)	Package (pcs)	Code
Str. 2k FeZn	0,374	1	V550
Str. 2k Cr	0,361	1	V560

Application: Straightener is used for straightening and inflexion conductors.

Material: Hot dip galvanized or stainless steel.

STRAIGHTENER TOOLED – 3 pegs

Marking	Weight (kg)	Package (pcs)	Code
Str. 3k FeZn	0,398	1	V555
Str. 3k Cr	0,384	1	V565

Application: Straightener is used for straightening and inflexion conductors.

Material: Hot dip galvanized or stainless steel.

TOOLS

Marking	Weight (kg)	Package (pcs)	Code
Tools 13	0,102	1	Z970
Tools 17	0,214	1	Z975

Application: Assembly element lightning protection and grounding.

Standards

ČSN EN 62561-1	Lightning Protection System Components (LPC) – Part 1: Requirements for connection components
ČSN EN 62561-2	Lightning Protection System Components (LPC) – Part 2: Requirements for conductors and earth electrodes
ČSN EN 62561-4	Lightning Protection System Components (LPC) – Part 4: Requirements for conductors fasteners
ČSN 33 2000-5-54	Electrical equipment. Part 5: Selection and erection of electrical equipment. Chapter 54: Earthing arrangements and protective conductors.
ČSN EN 62305-1	Protection against lightning - Part 1: General principles
ČSN EN 62305-2	Protection against lightning - Part 2: Risk manamegent
ČSN EN 62305-3	Protection against lightning - Part 3: Physical damage to structures and life hazard
ČSN EN 62305-4	Protection against lightning - Part 4: Electrical and electronic system within structures

Technical information

Table count weight and length conductors:

Material	Dimension	Weight 1 m (kg)	Length 1 kg (m)
H.D.G. round conductor	ø 8 mm	0,40	2,50
H.D.G. round conductor	ø 10 mm	0,62	1,61
H.D.G. + PVC round conductor	ø 10/13 mm	0,695	1,44
H.D.G. stranded conductor	cross section 25 mm²	0,226	4,42
H.D.G. stranded conductor	cross section 35 mm²	0,28	3,57
H.D.G. stranded conductor	cross section 50 mm²	0,40	2,50
H.D.G. stranded conductor	cross section 70 mm²	0,617	1,62
H.D.G. tape conductor	20 x 3 mm	0,48	2,08
H.D.G. tape conductor	30 x 4 mm	0,95	1,05
Cooper round conductor	ø 7 mm	0,35	2,86
Cooper round conductor	ø 8 mm	0,45	2,22
Lead sheet	250 x 0,6 mm	1,70	0,59
AlMgSi round conductor	ø 8 mm	0,135	7,40
AlMgSi+PVC round conductor	ø 8/11 mm	0,200	5,00
Inox round conductor	ø 8 mm	0,40	2,50
Inox round conductor	ø 10 mm	0,62	1,62
Inox tape conductor	30 x 3,5 mm	0,84	1,19

Table recommended tightening torques

Screw size	Made of			
	H.D.G. steel	Copper	Stainless steel	Galvanized steel
M 6	-	-	8 Nm	8 Nm
M 8	10 Nm	7 Nm	10 Nm	-
M 10	20 Nm	15 Nm	20 Nm	-

Sorting (by ČSN EN 62561-1) – Connecting components (clams) in terms of the ability to withstand electric current of lightning classified as Class N (50kA) for normal strain.

Table recommended material combinations:

material	H.D.G. steel	Copper	Aluminium	Stainless steel
H.D.G. steel	yes	no	yes	yes
Copper	no	yes	no	yes
Aluminium	yes	no	yes	yes
Stainless steel	yes	yes	yes	yes

TREMIS

ЪЛНИЕЗАЩИТА ЕООД

+359 894 311 788

e-mail : mid_1222@yahoo.com

www.zashtitabg.com

За да направите запитване, кликнете ТУК!